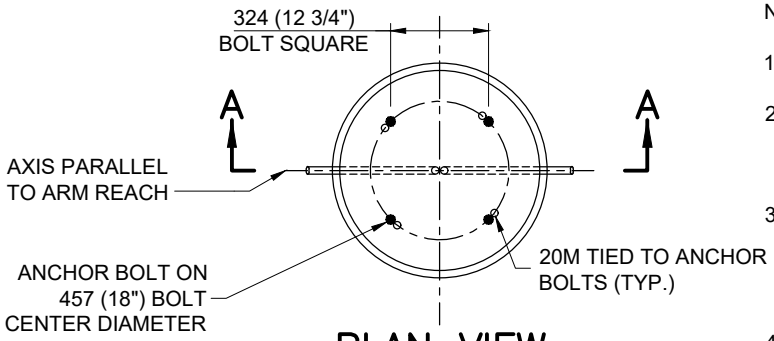

PLAN VIEW

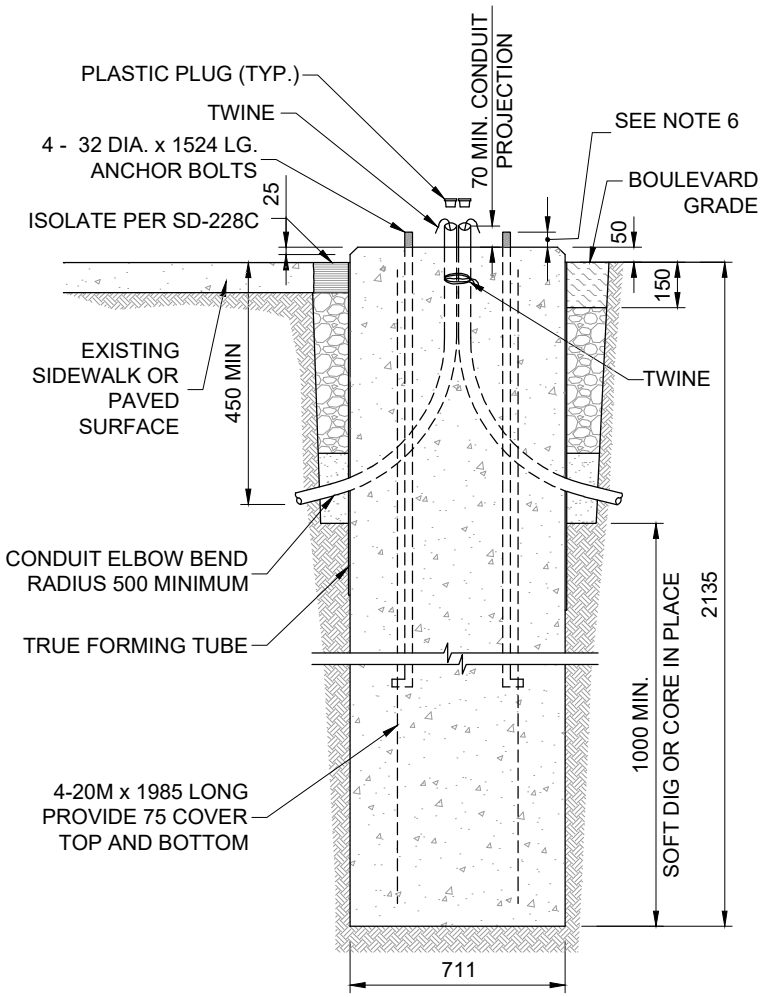

SECTION A–A

NOTES:

1. 711 mm Ø TRUE FORMING TUBE SHALL BE USED.
2. THREADED PORTION OF ANCHOR BOLTS SHALL BE PROTECTED FROM FOULING PRIOR TO CONCRETE POUR.
3. ALL CONDUITS SHALL BE BUNDLED INTO A GROUP IN CENTER OF BASE, AND TIED TOGETHER BELOW THE TOP OF THE BASE PRIOR TO CONCRETE POUR. INSTALL PLASTIC PLUGS PRIOR TO CONCRETE POUR.
4. FOLLOWING 24 HOUR MINIMUM CONCRETE CURING TIME, STRIP THE TOP PORTION OF THE TRUE FORMING TUBE A MINIMUM 150mm BELOW FINISHED PAVED SURFACE OR BOULEVARD GRADE.
5. BACKFILL SHALL CONFORM TO REQUIREMENTS OF SD-342.
6. BOLT PROJECTION: 45-50mm
7. CONCRETE AND REINFORCING SHALL CONFORM TO REQUIREMENTS OF W 2160 (LATEST EDITION) FOR TYPE A STRUCTURES (MONOLITHIC SEWERS AND REINFORCED STRUCTURES).
8. REFER TO INTERSECTION DESIGN DRAWINGS AND SD-318 FOR ALIGNMENT OF ANCHOR BOLTS.
9. REINFORCING BARS AND TIES SHALL BE HOT-DIP GALVANIZED IN ACCORDANCE WITH ASTM A767 (LATEST EDITION) CLASS II (MIN. 610 g/m^2)
10. CONDUIT ELBOW BEND RADIUS 500mm MIN.

DIMENSIONS ARE IN MILLIMETRES
(UNLESS OTHERWISE NOTED)

Winnipeg

THE CITY OF WINNIPEG
PUBLIC WORKS DEPARTMENT

Reference Spec. No.
CW 3620–R5

Revisions

No.	Date	Description	By
3	25/03/19	REVISED BY TRAFFIC SIGNALS	LG
2	12/11/14	REVISED BY DILLON CONSULTING	CDW
1	2/6/19	ADDED GROUND ROD	

SIGNAL POLE BASE – TYPE OD

(MEDIUM DUTY – 32 DIA. BOLTS)

Designed By: L.G.
Drawn By: J.S.
Scale : N.T.S.
Checked By: S.S.
Date: 2025/03/19
Drawing No. SD–312A
Approved: L.L.Garet