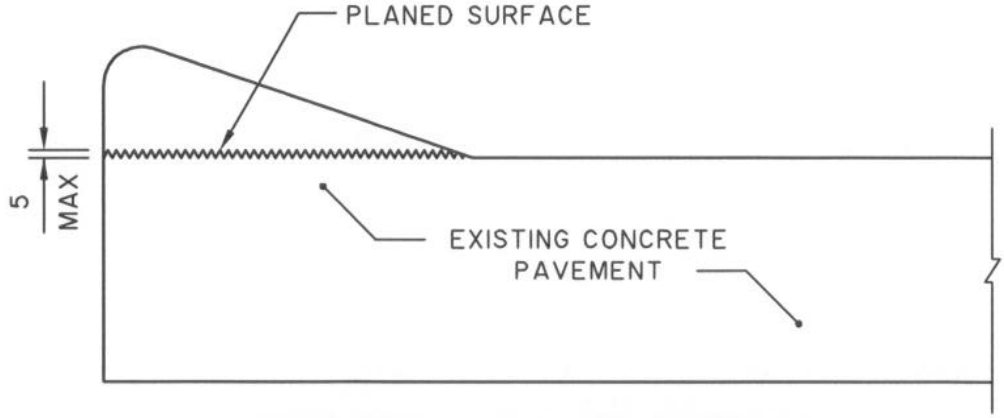

INTEGRAL LIP CURB REMOVAL

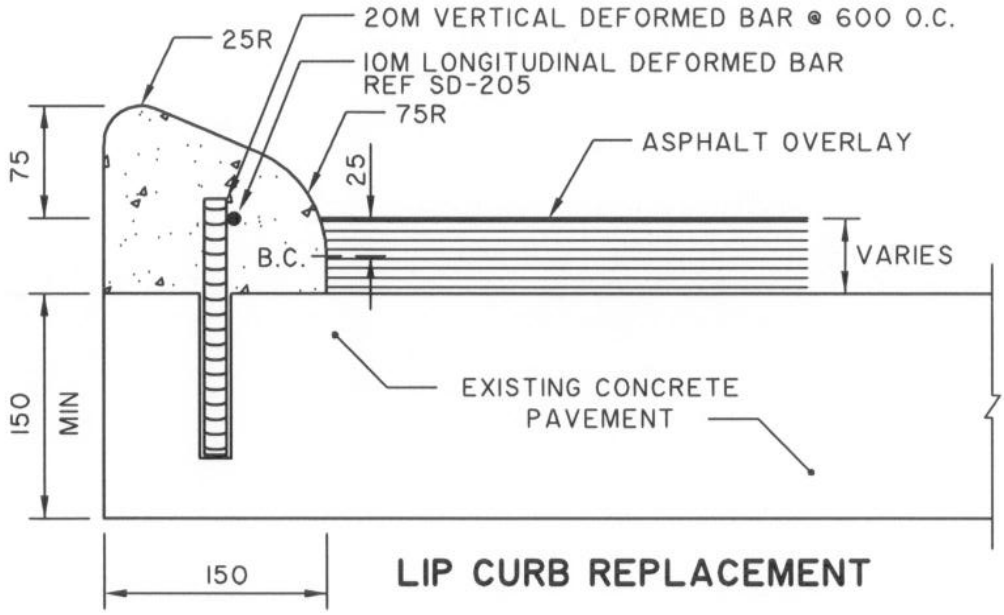

LIP CURB REPLACEMENT

NOTE: 1. APPLICABLE FOR CURB RENEWAL ON LOCAL RESIDENTIAL STREETS; EXCLUDING APPROACHES.

2. TRANSVERSE SAW CUT EVERY 6000 OR AT PAVEMENT JOINTS.

DIMENSIONS ARE IN MILLIMETRES

THE CITY OF WINNIPEG PUBLIC WORKS DEPARTMENT	Revisions		
Reference Spec. No. CW 3240, CW 3310, CW3450	No. / Date / Description / By		
MODIFIED LIP CURB	Designed By: B.P.	Drawn By: lwb	Scale : N.T.S.
	Checked By: D.R.K.	Date: 03 - 01 - 27	Drawing No.
	Approved: SURFACE WORKS COMMITTEE		SD-202C