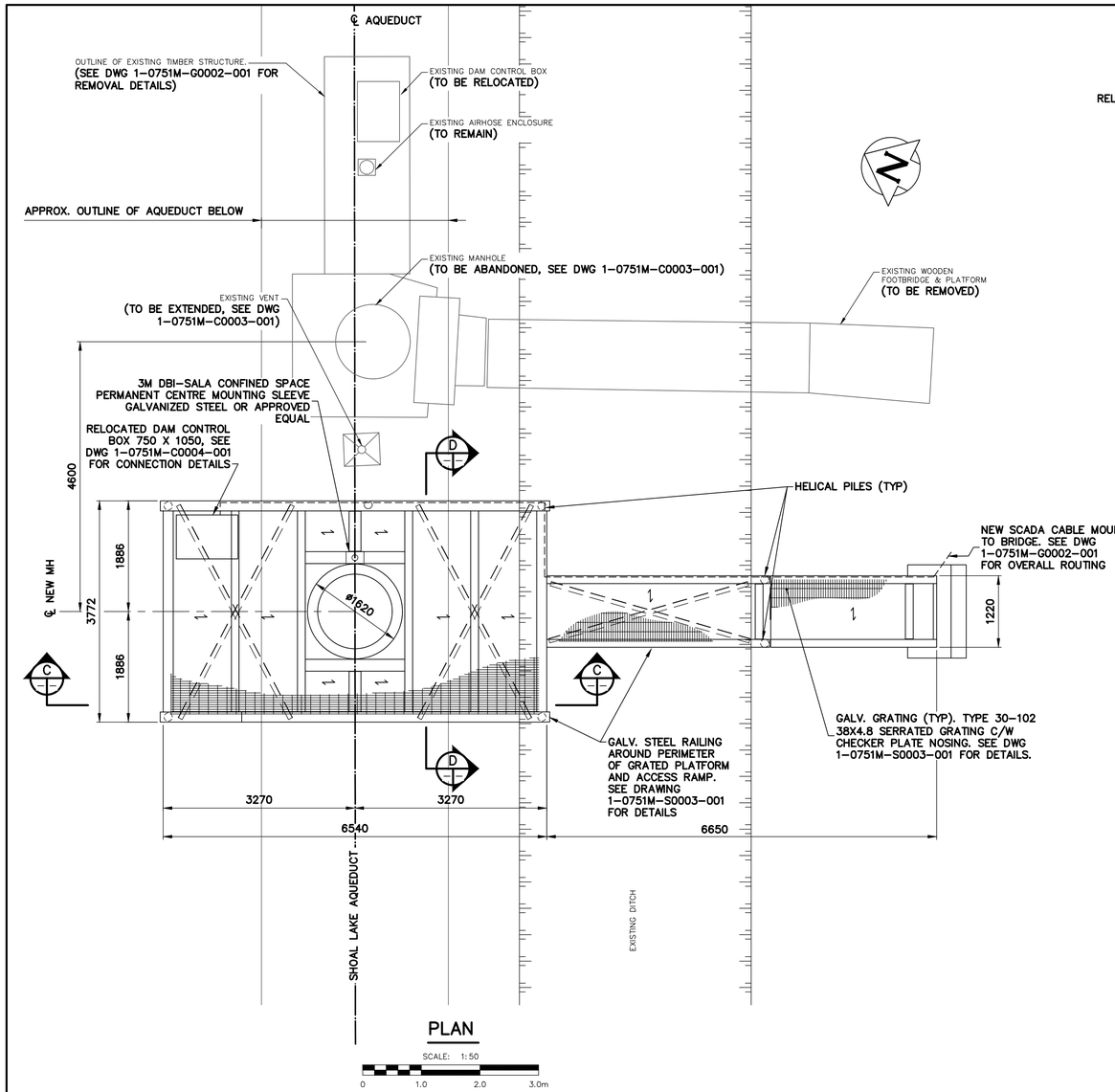


## PLAN

SCALE: 1:50

0 1.0 2.0 3.0m

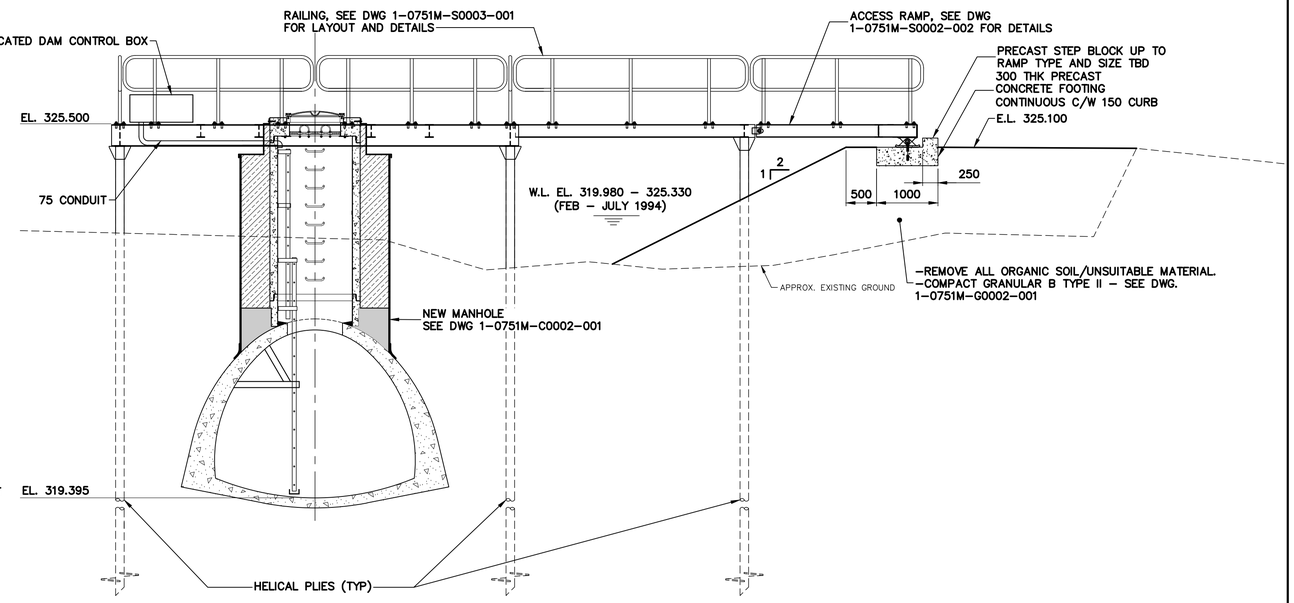


## ELEVATION

SCALE: 1:50

0 1.0 2.0 3.0m

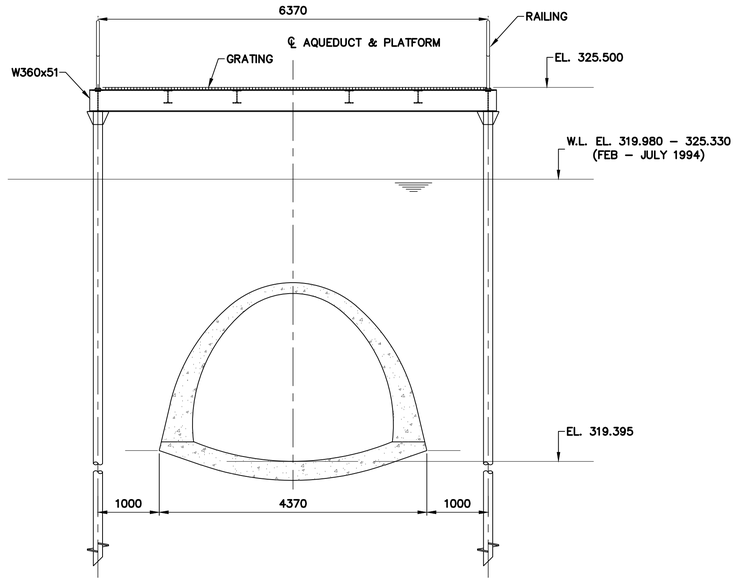


## SECTION – PROPOSED STRUCTURE (C)

SCALE: 1:50

0 1.0 2.0 3.0m

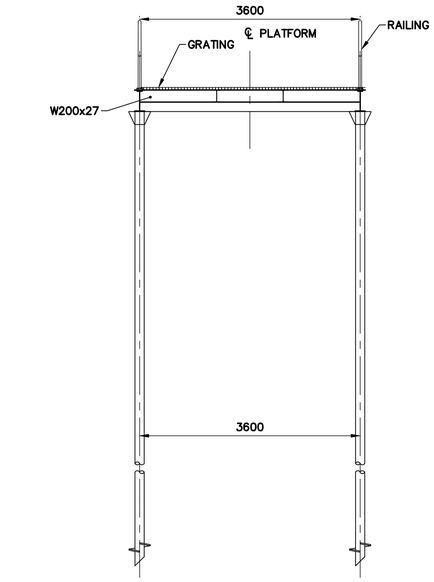


## SECTION – PROPOSED STRUCTURE (D)

SCALE: 1:50

0 1.0 2.0 3.0m

### DESIGN CRITERIA:

THE DESIGN OF THE STRUCTURE IS IN ACCORDANCE WITH PART 4 (STRUCTURAL DESIGN) OF DIVISION B, NBCC 2020 AND THE 2024 MANITOBA BUILDING CODE AMENDMENTS.

- IMPORTANCE CATEGORY: POST DISASTER
- DEAD LOAD: 1.0 kPa
- LIVE LOAD: 4.8 kPa
- SNOW: 2.45 kPa
- WIND q(1/50): 0.40 kPa
- ASSUMED SITE CLASSIFICATION FOR SEISMIC RESPONSE: CLASS E

### NOTES:

1. ALL STRUCTURAL AND MISCELLANEOUS STEEL SHALL CONFORM TO CSA G40.20-13/G40.21-13 (R2018) GRADE 350W UNLESS NOTED OTHERWISE.
2. ALL STEEL SHALL BE HOT DIPPED GALVANIZED TO ASTM A123/A123M-17.
3. STRUCTURAL STEEL FABRICATION AND ERECTION SHALL CONFORM TO CSA S16-19.
4. SPLICING OF MEMBERS NOT PERMITTED UNLESS OTHERWISE NOTED.
5. SEE DWG 1-0751M-G0002-001 FOR GENERAL SLA CONSTRUCTION NOTES.
6. SEE DWG 1-0751M-C0004-001 FOR SLA/SITE CROSS SECTIONS FOR TEMPORARY AND PERMANENT WORKS
7. ANY COMPONENTS OR DETAILS NOT SHOWN EXPLICITLY BUT ARE REQUIRED TO COMPLETE THE WORK SHALL BE CONSIDERED TO BE INCLUDED TO THE WORK. CONSULT THE CONTRACT ADMINISTRATOR FOR CLARIFICATION.
8. THE CONTRACTOR SHALL PROMPTLY IDENTIFY ANY CONFLICTS OR CONTRADICTIONS BETWEEN PROJECT SPECIFICATIONS AND REQUIREMENTS AND TECHNICAL SPECIFICATIONS OR DESIGN DRAWINGS TO THE ATTENTION OF THE CONTRACT ADMINISTRATOR.
9. BOLTS, NUTS, AND WASHERS TO ASTM A325 UNLESS OTHERWISE NOTED.
10. ALL WELDING SHALL BE PERFORMED BY QUALIFIED WELDERS FULLY APPROVED FOR STRUCTURAL WELDING BY THE CANADIAN WELDING BUREAU IN ACCORDANCE WITH CSA W47.1:19, CSA W47.2-11 (R2015) AND CSA W59-18.
11. STRUCTURAL STEEL SUPPLIER SHALL SUBMIT SHOP DRAWINGS, SEALED BY A PROFESSIONAL ENGINEER REGISTERED IN THE PROVINCE OF MANITOBA. SHOWING ALL DESIGN AND FABRICATION DETAILS OF CONNECTIONS PRIOR TO FABRICATION.

### FOUNDATION NOTES:

1. REFERENCE GEOTECHNICAL REPORT BY TREK DATED NOV. 6, 2024
2. NOTWITHSTANDING THE INFORMATION PROVIDED IN THE GEOTECHNICAL REPORT, THE FOUNDATION AND GENERAL CONTRACTORS SHALL SATISFY THEMSELVES AS TO THE PREVAILING CONDITIONS AT THE SITE.
3. HELICAL PILES TO BE DESIGNED BY THE CONTRACTOR / SUPPLIER UNDER SEAL OF AN ENGINEER REGISTERED TO PRACTICE IN THE PROVINCE OF MANITOBA FOR THE FOLLOWING PEAK LOADING:
   - SHAFT DIAMETER SHALL BE 140 mm WITH MAX. 610 mm HELIX DIAMETER. ANY CHANGES SHALL BE SUBJECT TO THE REVIEW AND ACCEPTANCE OF THE ENGINEER.
   - SLS AXIAL LOAD = 80 kN
   - ULS AXIAL LOAD = 100 kN
   - MAXIMUM SETTLEMENT AT SLS = 25 mm
   - PILE SHALL BE DESIGNED TO RESIST A MINIMUM 75 mm ECCENTRICITY AND HORIZONTAL FACTORED LOAD OF 7kN.
   - THE PILE SHAFT SHALL BE CAPABLE OF HAVING A 26 mm DIAMETER HOLE DRILLED THROUGH THE THE CENTRE OF THE PILE FOR CONNECTION TO THE PLATFORM STRUCTURE.
4. HELICAL PILES TO BE HOT-DIP GALVANIZED.
5. PILE SHAFT WALL THICKNESS TO BE MINIMUM 6 mm.
6. HELICES SHALL HAVE A MINIMUM THICKNESS OF 9.5 mm.
7. PILE SHAFT SHALL BE PIPE IN ACCORDANCE WITH ASTM A252 AND HELIX SHALL BE MADE FROM STEEL PLATE IN ACCORDANCE WITH CSA G40.21 300W.
8. HELICAL PILE SUPPLIER TO PROVIDE SITE SPECIFIC SHOP DRAWINGS SEALED BY AN ENGINEER REGISTERED IN THE PROVINCE OF MANITOBA. SHOP DRAWINGS TO INCLUDE PLAN INDICATING ALL PILES.
9. AN INSTALLATION REPORT SHALL BE PROVIDED INDICATING TORQUE AND CAPACITY OF PILE ACHIEVED.
10. ALL FOUNDATION INSTALLATIONS SHALL BE REVIEWED BY QUALIFIED GEOTECHNICAL PERSONNEL REPORTING TO THE GEOTECHNICAL ENGINEER THAT ISSUED THE SITE-SPECIFIC PILE DESIGN IN ACCORDANCE WITH THE MANITOBA BUILDING CODE ARTICLE 4.2.2.3, AND THE REQUIREMENTS OF PART 4 OF THE NATIONAL BUILDING CODE OF CANADA.
11. HELICAL PILE SHALL NOT DAMAGE THE EXISTING STRUCTURE.

METRIC
WHOLE NUMBERS INDICATE MILLIMETRES
DECIMALIZED NUMBERS INDICATE METRES
UNLESS OTHERWISE NOTED

ENGINEERS GEOSCIENTISTS MANITOBA
Certificate of Authorization
Stantec Consulting Ltd.
No. 1301

LOCATION APPROVED
UNDERGROUND STRUCTURES

SUPV. U/G STRUCTURES COMMITTEE — DATE

NOTE:
LOCATION OF UNDERGROUND STRUCTURES AS SHOWN ARE BASED ON THE BEST INFORMATION AVAILABLE BUT NO GUARANTEE IS GIVEN THAT ALL EXISTING UTILITIES ARE SHOWN OR THAT THE GIVEN LOCATIONS ARE EXACT. CONFIRMATION OF EXISTENCE AND EXACT LOCATION OF ALL SERVICES MUST BE OBTAINED FROM THE INDIVIDUAL UTILITIES BEFORE PROCEEDING WITH CONSTRUCTION.

VERTICAL DATUM: CGVD28 (HT2.0 Geoid)
HORIZONTAL DATUM: NAD83 (June 1990), Zone 14

| NO. | REVISIONS | YYYY/MM/DD | BY |
|---|---|---|---|
| 0 | ISSUED FOR CONSTRUCTION | 2025/04/28 | ADB |

Stantec

| | | | |
|---|---|---|---|
| DESIGNED BY | SL | CHECKED BY | BF |
| DRAWN BY | AH | APPROVED BY | ADB |
| SCALE: HORIZONTAL | AS NOTED | RELEASED FOR CONSTRUCTION | |
| VERTICAL | N/A | | JESSICA McCOMBE, P.Eng. |
| DATE | APRIL 28, 2025 | DATE | APRIL 25, 2025 |

PLOT DATE: 2025 04 28

ENGINEER'S SEAL
PROVINCE OF MANITOBA
B. E. FRASER
Member
23402
REGISTERED PROFESSIONAL ENGINEER
2025-04-28

CONSULTANT DRAWING NUMBER

TENDER NUMBER: 82-2025
CONTRACT NUMBER: N/A

Winnipeg

# THE CITY OF WINNIPEG

WATER AND WASTE DEPARTMENT
WATER SERVICES DIVISION

SHOAL LAKE AQUEDUCT
MANHOLE REPAIRS

MILE 93.69 FOOTBRIDGE AND PLATFORM
GENERAL ARRANGEMENT

SHEET 9 OF 15

CITY DRAWING NUMBER
1-0751M-S0001-001

FILE PATH: U:\133600064\09. CAD\07 Sheets\3 SLA DD\
FILE NAME: 9 PR GENERAL ARRANGEMENT.dwg

FOR INDEX SEE DWG 1-0751A-D0009-001