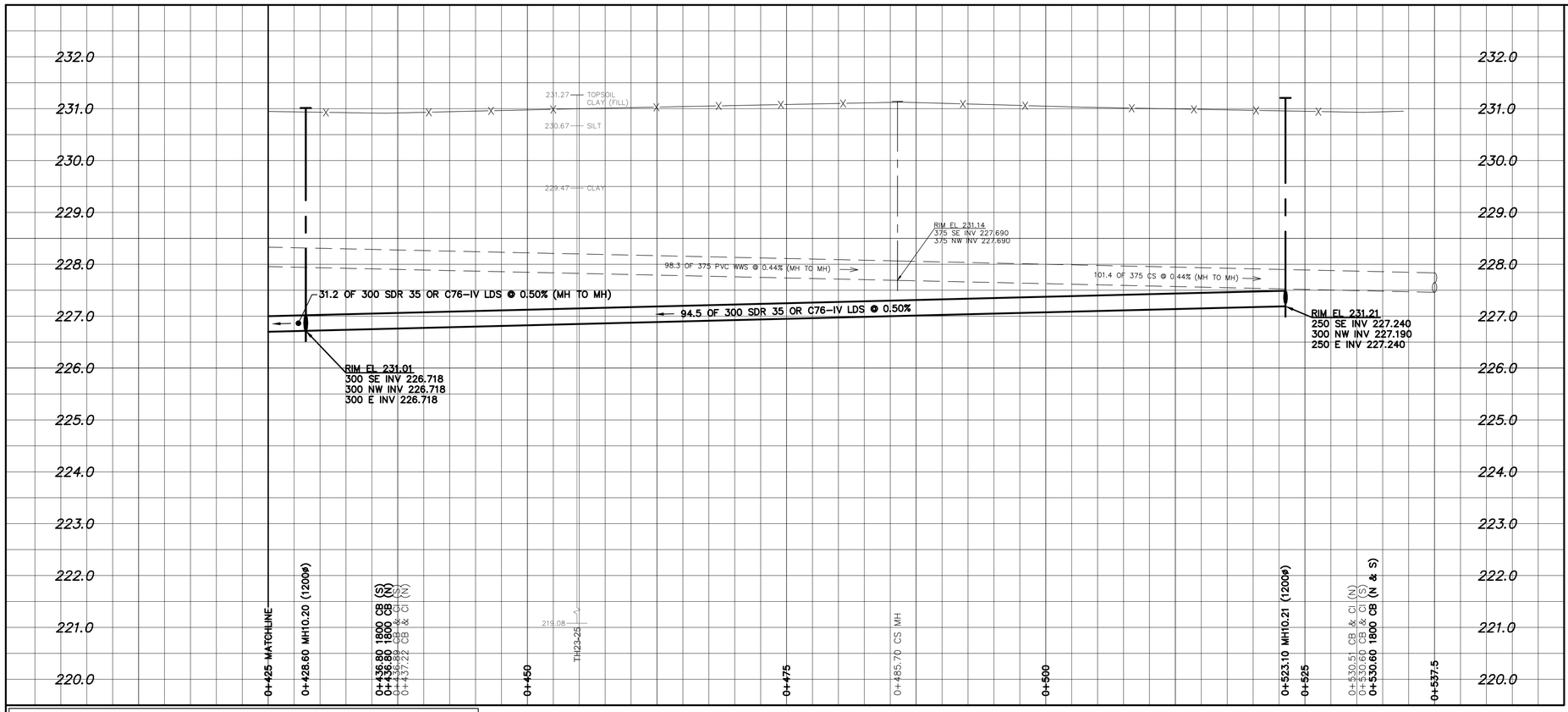

NOTE: CHAINAGES SHOWN ARE ALONG S. ℄ OF BELMONT AVENUE
STA. 1+000.000 = E ℄ POWERS STREET

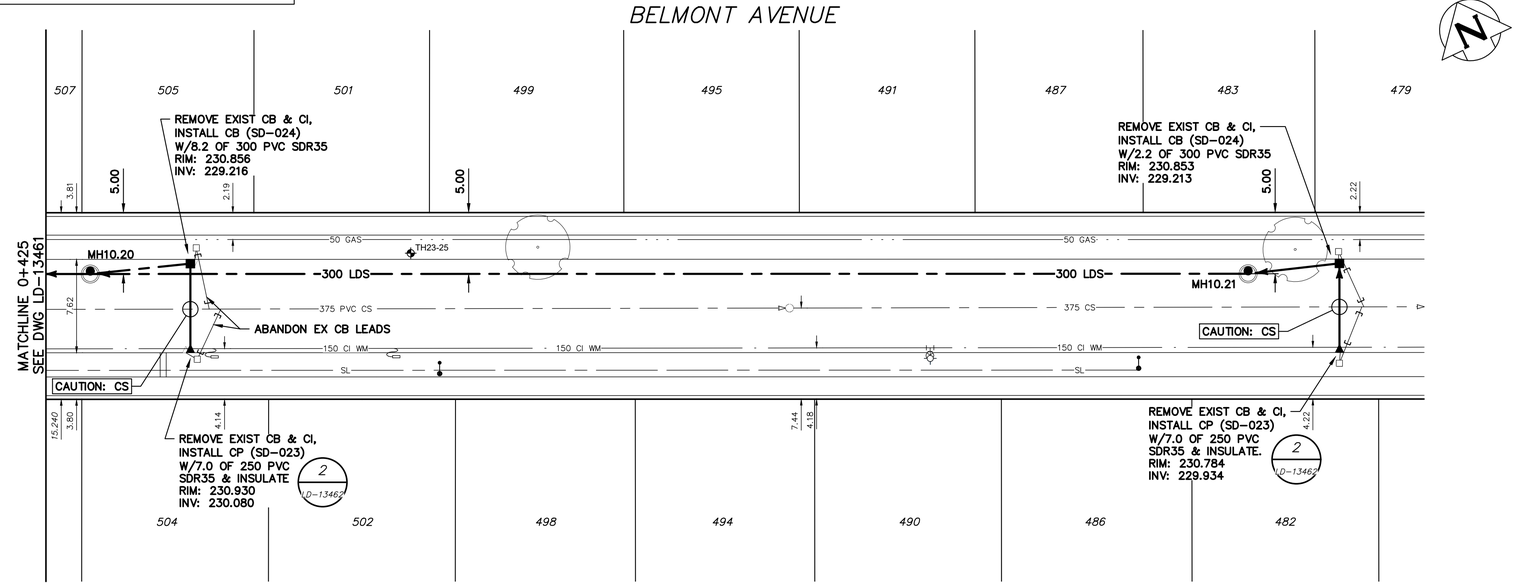

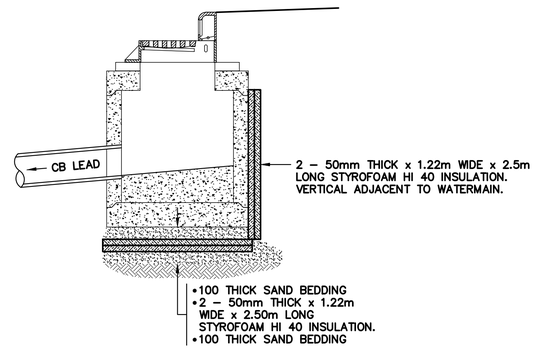

2 DETAIL – CATCHPIT INSULATION
Scale 1:25

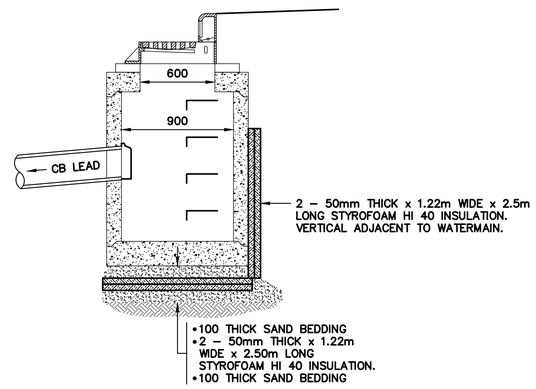

1 DETAIL – CATCHBASIN INSULATION
Scale 1:25

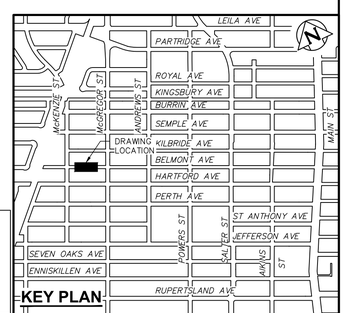

FOR INDEX SEE LD-13448

ENGINEERS GEOSCIENTISTS MANITOBA
Certificate of Authorization
AECOM Canada ULC
No. 4671

METRIC
WHOLE NUMBERS INDICATE MILLIMETRES
DECIMALIZED NUMBERS INDICATE METRES

0.0 5.0 10.0 15.0 20.0 25.0

WARNING

IF POWER EQUIPMENT OR EXPLOSIVES ARE TO BE USED FOR EXCAVATION ON THIS PROJECT THE CONTRACTOR MUST:

1) NOTIFY THE GAS COMPANY OF THE PROPOSED LOCATION OF EXCAVATION.

2) TAKE PRECAUTION TO AVOID DAMAGE TO GAS COMPANY INSTALLATIONS.

SEE PROVINCIAL REGULATION 210/72 FOR DETAILS

LOCATION APPROVED
UNDERGROUND STRUCTURES

SUPV. U/G STRUCTURES COMMITTEE — DATE

NOTE:

LOCATION OF UNDERGROUND STRUCTURES AS SHOWN ARE BASED ON THE BEST INFORMATION AVAILABLE BUT NO GUARANTEE IS GIVEN THAT ALL EXISTING UTILITIES ARE SHOWN OR THAT THE GIVEN LOCATIONS ARE EXACT. CONFIRMATION OF EXISTENCE AND EXACT LOCATION OF ALL SERVICES MUST BE OBTAINED FROM THE INDIVIDUAL UTILITIES BEFORE PROCEEDING WITH CONSTRUCTION.

B.M.
ELEV.

CONSTRUCTION COMPLETION DATE: YYYY MM DD

NO.	REVISIONS	DATE	BY
0	ISSUED FOR TENDER	25/05/12	ADL

AECOM

DESIGNED BY	MJK	CHECKED BY	MGM
DRAWN BY	ADL	APPROVED BY	KWF
SCALE: HORIZONTAL	1:250	RELEASED FOR CONSTRUCTION	S Cournoyer
VERTICAL	1:50		
DATE	2025 05 14	DATE	25 05 12

PLOT DATE: 2025 05 14

ENGINEER'S SEAL
PROVINCE OF MANITOBA
J.A. THOMPSON
Member 30632
REGISTERED PROFESSIONAL ENGINEER
2025-05-15

CONSULTANT DRAWING NUMBER
C–1014

Winnipeg

THE CITY OF WINNIPEG
WATER AND WASTE DEPARTMENT
ENGINEERING DIVISION

JEFFERSON EAST COMBINED SEWER RELIEF
CONTRACT 10

BELMONT AVENUE
27.0m EAST OF McKENZIE STREET
TO 40.0m WEST OF McGREGOR STREET

SHEET 16 OF 21

CITY DRAWING NUMBER
LD–13462

Tender No: 410–2025
CONTRACT NUMBER: 10

FILE PATH: C:\Users\leipia\AppData\Local\Temp\AcPublish_2416\
FILE NAME: 60680190–SHT–30–Con10–C–1013_C–1014.dwg