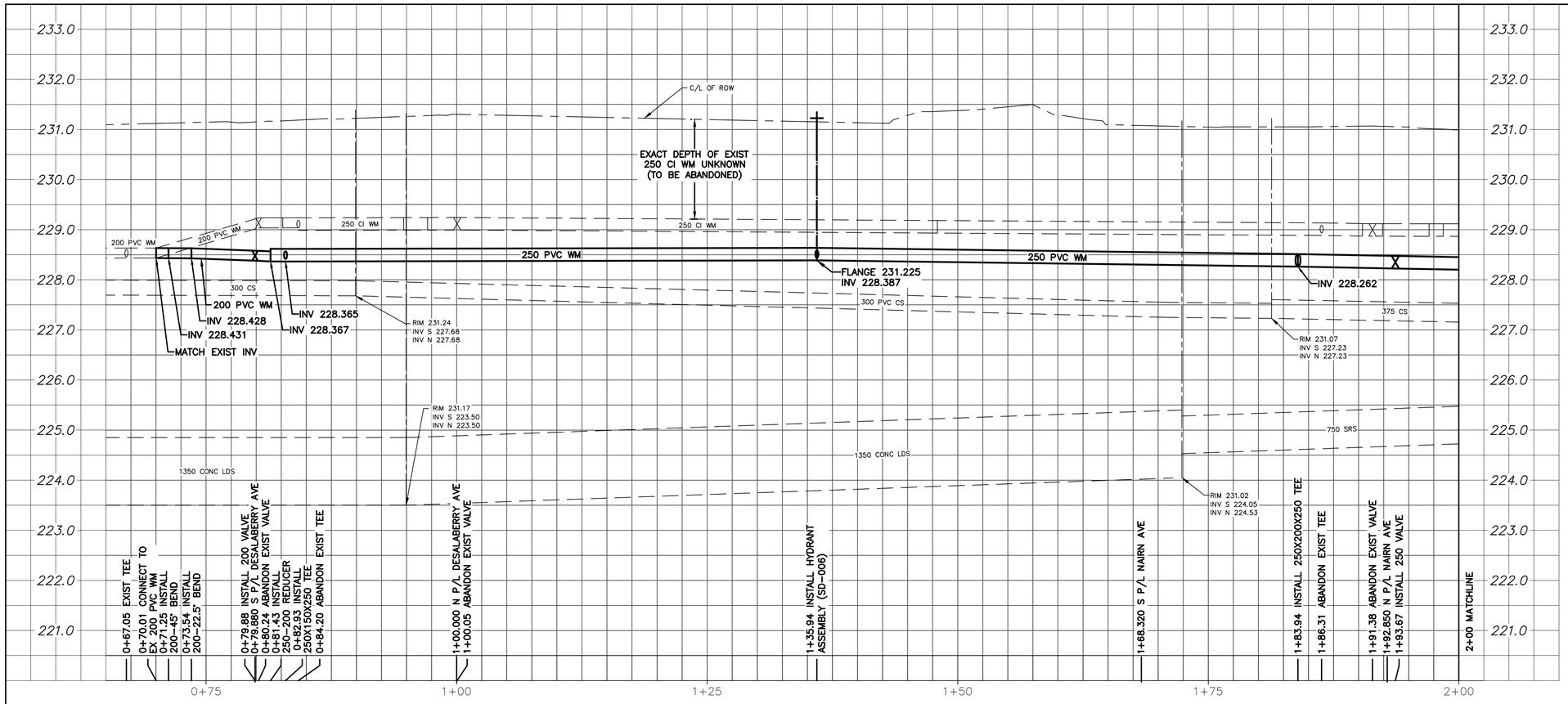

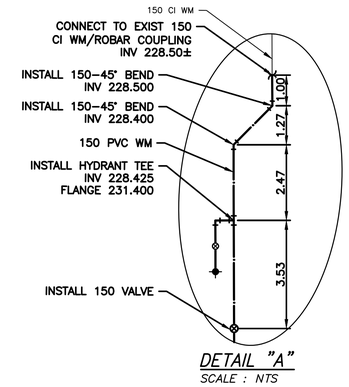

DETAIL "A"
SCALE : NTS

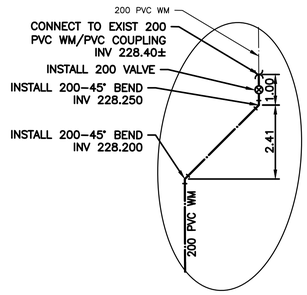

DETAIL "B"
SCALE : NTS

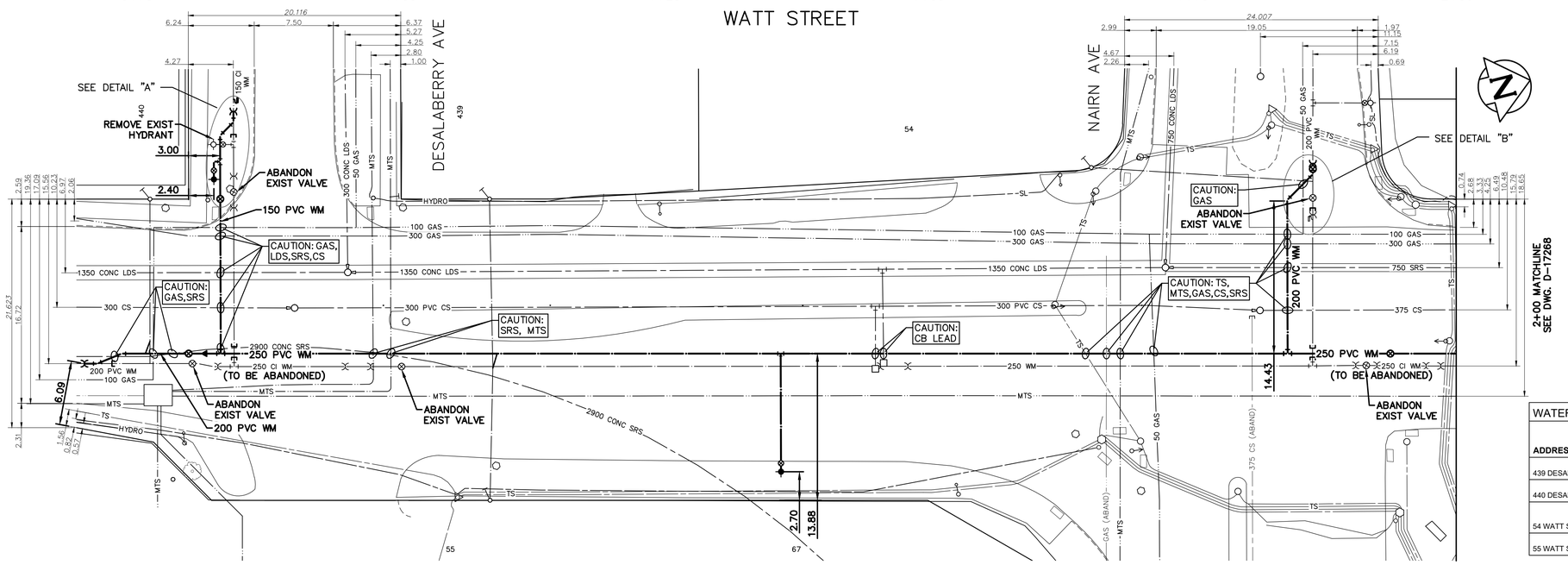

WATER SERVICE INFORMATION					
ADDRESS	SIZE (mm) MATERIAL (STREET)	SIZE (mm) MATERIAL (PROP.)	SHORT & LONG MEASUREMENT	CORP LOCATION	REMARK
439 DESALABERRY AVE	20 CU	20 CU	5.18 NSL BLDG 9.45 NNL DESALABERRY AVE	1.0 N OF S/C	RECONNECT SERVICE
440 DESALABERRY AVE	25 CU	25 CU	0.30 ST LINE 3.66 SNL BLDG	OPP S/C	RECONNECT SERVICE
54 WATT ST	20 CU	12 LEAD	7.19 NNL BLDG NE CORNER OF LOT	1.7 W OF VALVE NAIRN AVE WL WATT ST	RECONNECT SERVICE
55 WATT ST	50 CU	50 CU	1.22 SNL BLDG 8.08 N HYDT AT 55 WATT	8.20 N OF HYDT AT 55 WATT ST	RECONNECT SERVICE

NOTE: CHAINAGES SHOWN ARE ALONG CENTERLINE OF ROW

NOTE: VALVES TO BE INSTALLED COUNTER-CLOCKWISE TO CLOSE

0.0 5.0 10.0 15.0 20.0 25.0

FOR INDEX SEE D-17261

METRIC
WHOLE NUMBERS INDICATE MILLIMETRES
DECIMALIZED NUMBERS INDICATE METRES

ENGINEERS GEOSCIENTISTS MANITOBA
Certificate of Authorization
Stantec Consulting Ltd.
No. 1301

LOCATION APPROVED
UNDERGROUND STRUCTURES

SUPV. U/G STRUCTURES COMMITTEE — DATE

NOTE:
LOCATION OF UNDERGROUND STRUCTURES AS SHOWN ARE BASED ON THE BEST INFORMATION AVAILABLE BUT NO GUARANTEE IS GIVEN THAT ALL EXISTING UTILITIES ARE SHOWN OR THAT THE GIVEN LOCATIONS ARE EXACT. CONFIRMATION OF EXISTENCE AND EXACT LOCATION OF ALL SERVICES MUST BE OBTAINED FROM THE INDIVIDUAL UTILITIES BEFORE PROCEEDING WITH CONSTRUCTION.

B.M.
ELEV.

NO.	REVISIONS	DATE	BY
00	ISSUE FOR TENDER	2025.04.21	RS

Stantec

DESIGNED BY	RS	CHECKED BY	RS
DRAWN BY	MR	APPROVED BY	RS
SCALE: HORIZONTAL	1:250	RELEASED FOR CONSTRUCTION	
VERTICAL	1:50		R.L.
DATE	2025.03.04	DATE	2025.04.17

PLOT DATE: 2025 04 18

ENGINEER'S SEAL
PROVINCE OF MANITOBA
2025-04-21
R. M. SHERLOCK
Member 24045
REGISTERED PROFESSIONAL ENGINEER

CONSULTANT DRAWING NUMBER
C-206

Winnipeg

THE CITY OF WINNIPEG
WATER AND WASTE DEPARTMENT
ENGINEERING DIVISION

2025 WATER MAIN RENEWALS
CONTRACT 3
WATT STREET
9.92 S OF DESALABERRY AVENUE TO 6.70 N OF NAIRN AVENUE

SHEET 8 OF 9

CITY DRAWING NUMBER
D-17267

TENDER NUMBER: 364-2025
CONTRACT NUMBER: 3

FILE PATH: c:\users\mrasker\dc\accdocs\stantec consulting\111220934_c3_cow_2025_wm_renewal\project files\01_wip\04_civil\sheet_files\20934c-206