A1 SIZE - 594mm x 841mm

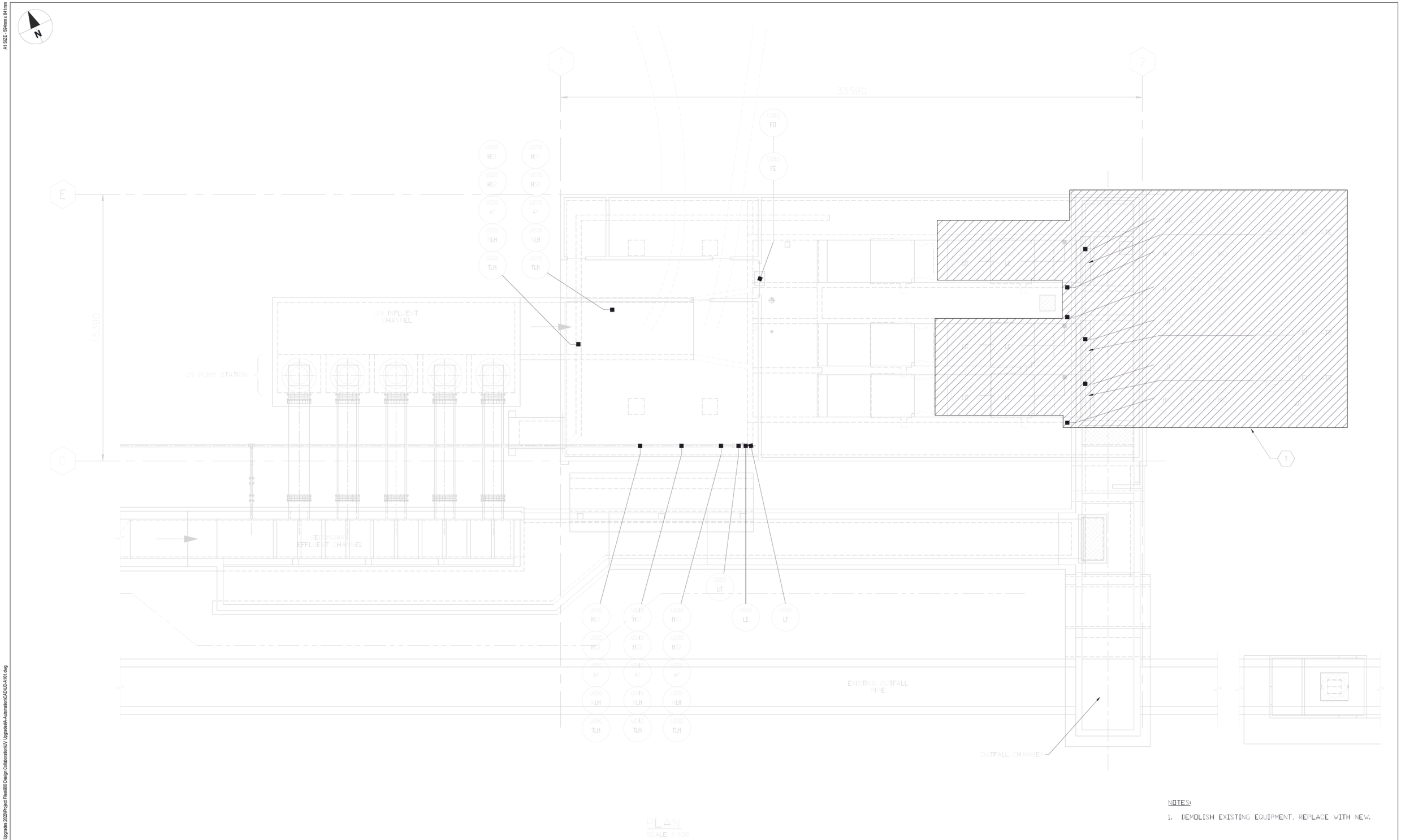

PLAN
SCALE 1:100

NOTES:

1. DEMOLISH EXISTING EQUIPMENT, REPLACE WITH NEW.

TENDER NO. 30-2025

ENGINEERS GEOSCIENTISTS MANITOBA
Certificate of Authorization
AECOM Canada ULC
No. 4671

NO.	REVISIONS	DATE	DESIGN	CHECK
00	ISSUED FOR TENDER	2025-02-26	MS	SB

AECOM

DESIGNED BY: MS	CHECKED BY: SB
DRAWN BY: RC	APPROVED BY: SB
SCALE: 1:50	RELEASED FOR CONSTRUCTION BY:
DATE: 2023-07-24	DATE:
CONSULTANT NO.:	UD-A101

ENGINEER'S SEAL
PROVINCE OF MANITOBA
M. SABIC
Member
46571
REGISTERED PROFESSIONAL ENGINEER
2025-02-28 Rev. 00

Winnipeg
THE CITY OF WINNIPEG
WATER AND WASTE DEPARTMENT

NEWPCC - SECONDARY EFFLUENT
UV DISINFECTION FACILITY
AUTOMATION
EXISTING UV DISINFECTION FACILITY
INSTRUMENT LOCATION PLAN - DEMOLITION ABOVE EL. 232.238

CITY DRAWING NUMBER	SHEET	REV.	SIZE
		00	A1

LAST SAVE: 2025/02/28 3:34 PM
PATH: C:\Users\Chavarr\DC\ACCDocs\AECOM\City of Winnipeg - NEWPCC Upgrades 2020\Project Files\600 Design Collaboration\UV Upgrades\Automation\CAD\UD-A101.dwg

PLAN
SCALE 1:100

DEMOLITION NOTES:

1. INSTRUMENTS ASSOCIATED WITH EXISTING UV SYSTEM TO BE DEMOLISHED.

TENDER NO. 30-2025

ENGINEERS GEOSCIENTISTS MANITOBA
Certificate of Authorization
AECOM Canada ULC
No. 4671

NO.	REVISIONS	DATE	DESIGN	CHECK
00	ISSUED FOR TENDER	2025-02-26	MS	SB

AECOM

DESIGNED BY: CR | CHECKED BY: SB
DRAWN BY: RC | APPROVED BY: SB
SCALE: 1:50 | RELEASED FOR CONSTRUCTION BY:
DATE: 2023-07-24 | DATE:
CONSULTANT NO.: UD-A102

ENGINEER'S SEAL: PROVINCE OF MANITOBA, M. SARIC, Member 46571, REGISTERED PROFESSIONAL ENGINEER, 2025-02-28, Rev. 00

THE CITY OF WINNIPEG
WATER AND WASTE DEPARTMENT

NEWPCC - SECONDARY EFFLUENT
UV DISINFECTION FACILITY
AUTOMATION
EXISTING UV DISINFECTION FACILITY
INSTRUMENT LOCATION PLAN - DEMOLITION ABOVE EL. 232.238

CITY DRAWING NUMBER | SHEET | REV. 00 | SIZE A1

A1 SIZE - 594mm x 841mm
LAST SAVE: 2025/02/26 3:35 PM
PATH: C:\Users\Zhanez\DC\ACCDocs\AECOM\City of Winnipeg - NEWPCC Upgrades 2023\Project Files\800 Design Collaboration\UV Upgrades\4-Automation\CAD\UD-A102.dwg

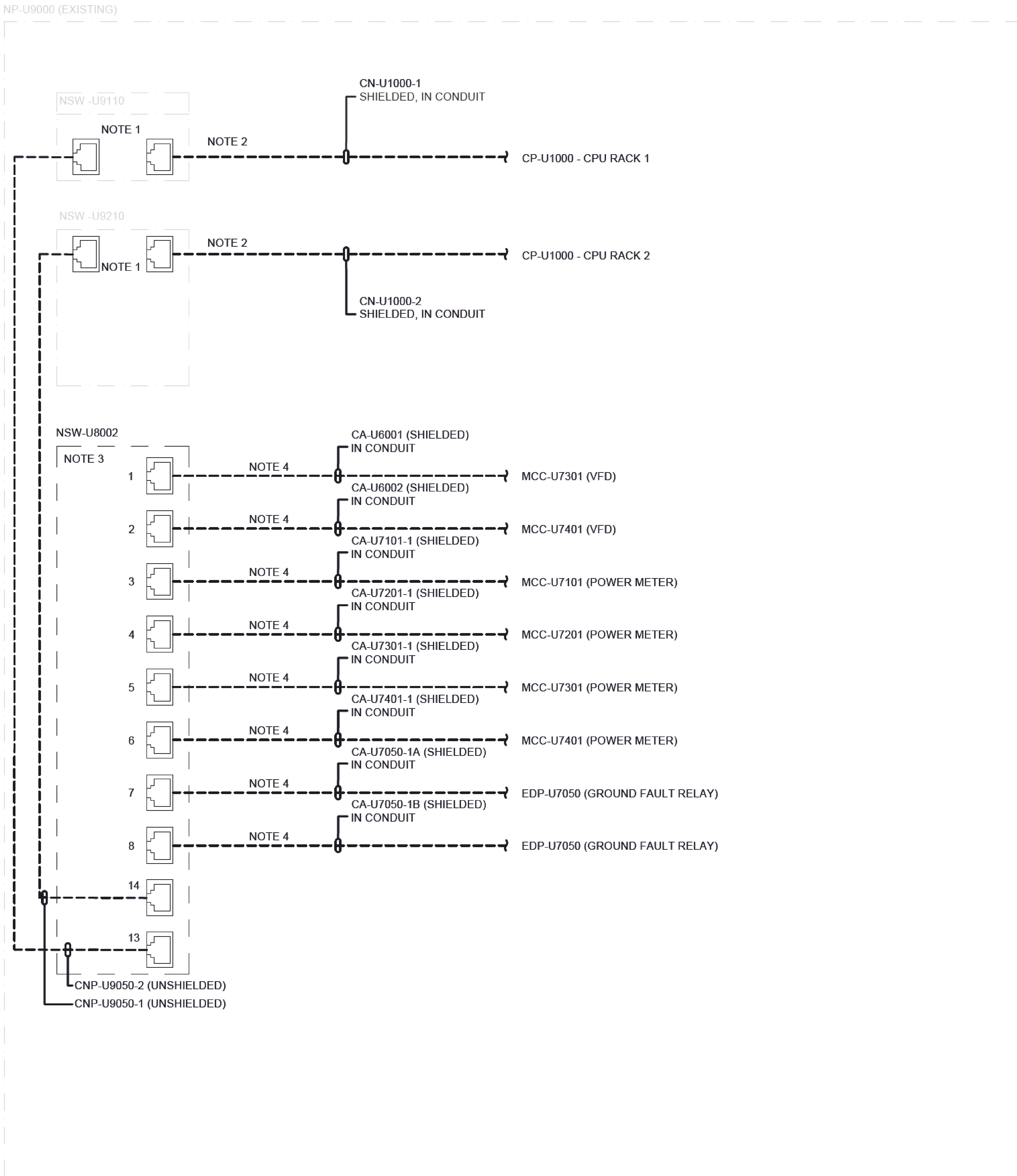

LEGEND:

- - - - CAT6 ETHERNET

— · — CABINET OR EQUIPMENT BOUNDARY

NOTES:

1. PORT NUMBERS ON NSW-U9110/9210 WILL BE SITE VERIFIED, CONTRACTOR TO REDLINE THE DRAWING ACCORDINGLY TO PROVIDE FINAL TERMINATION PORT NUMBER

2. REDUNDANT CONTROL NETWORK TERMINATION TO UV SYSTEM CONTROL CENTER SCC. PROVIDE A SEPARATE CONDUIT AND ROUTING FOR EACH CONNECTION.

3. PROVIDE AND INSTALL TEMPORARY NSW-U8002 IN EXISTING UV NETWORK PANEL NP-U9000, PROVIDE POWER AND INTERNAL TERMINATION AS PART OF UV UPGRADE PROJECT SCOPE. NSW-U8002 WITH ALL NETWORK TERMINATIONS WILL BE MOVED TO UV AREA PLC PANEL DURING DCS MIGRATION PROJECT OF UV AREA.

4. COORDINATE WITH CONTRACT ADMINISTRATOR AND THE CITY TO PROVIDE SUFFICIENT CABLE SLACK TO RE-ROUTE THE CABLES TO FUTURE INSTALLED PLC PANEL DURING UV AREA DCS MIGRATION PROJECT.

NO.	DRAWING TITLE	DRAWING NUMBER
REFERENCE DRAWING		

Certificate of Authorization
AECOM Canada ULC
No. 4671

TENDER NO. 30-2025

NO.	REVISIONS	DATE	DESIGN	CHECK
00	ISSUED FOR TENDER	2025-02-26	MS	SB

AECOM

DESIGNED BY: MS	CHECKED BY: SDS
DRAWN BY: TW	APPROVED BY: SRB
SCALE: NONE	RELEASED FOR CONSTRUCTION BY:
DATE: 2023-07-24	DATE:
CONSULTANT NO.: U0-A601	

ENGINEER'S SEAL
PROVINCE OF MANITOBA
M. SARIC
Member 46571
REGISTERED PROFESSIONAL ENGINEER
2025-02-28 Rev. 00

Winnipeg
THE CITY OF WINNIPEG
WATER AND WASTE DEPARTMENT

NEWPCC - SECONDARY EFFLUENT
UV DISINFECTION FACILITY
AUTOMATION
NETWORK ARCHITECTURE DIAGRAM
NP-U900

CITY DRAWING NUMBER	SHEET	REV.	SIZE
	001	00	A1

B SIZE - 279mm x 432mm

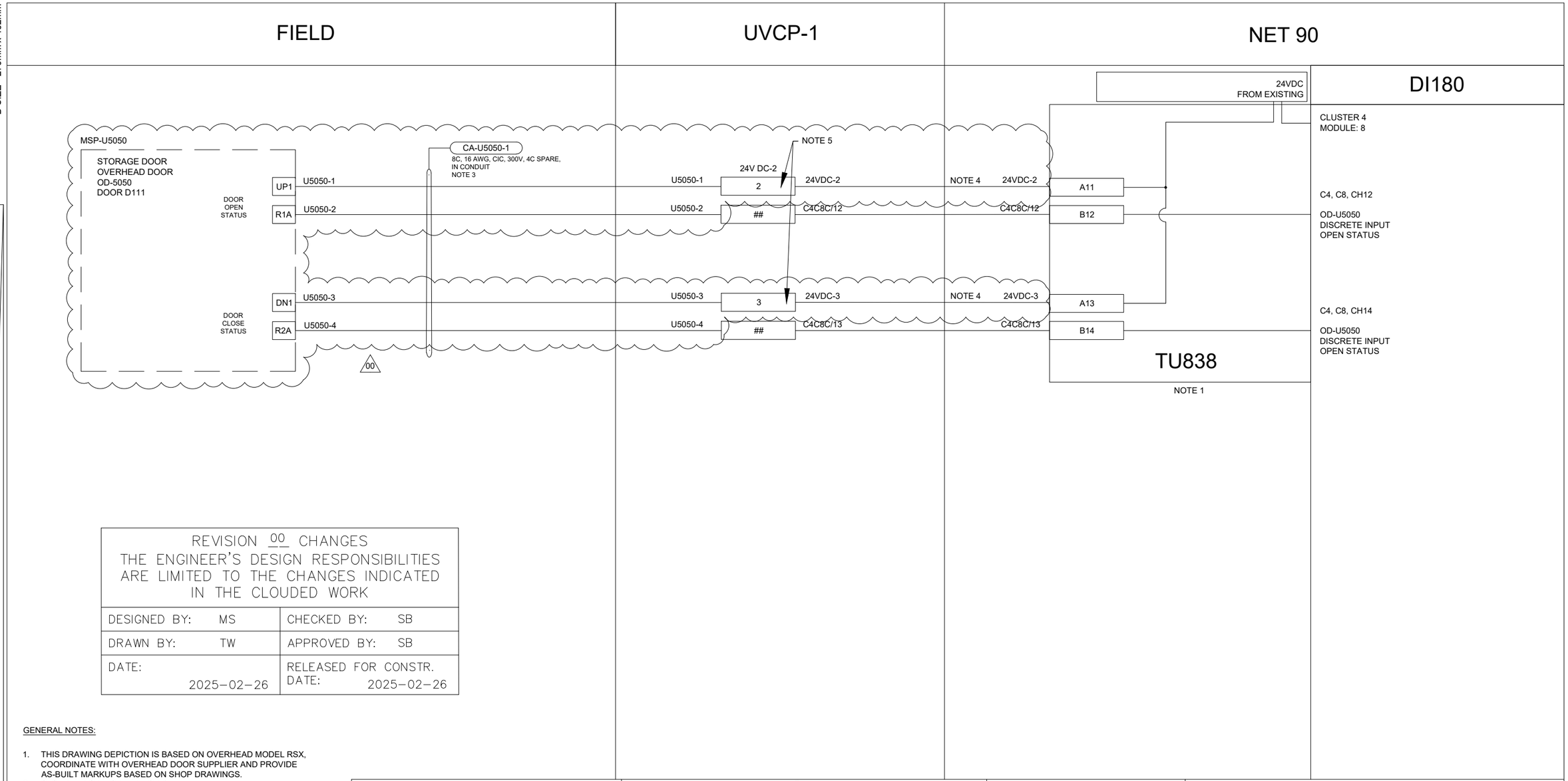

REVISION 00 CHANGES THE ENGINEER'S DESIGN RESPONSIBILITIES ARE LIMITED TO THE CHANGES INDICATED IN THE CLOUDED WORK	
DESIGNED BY: MS	CHECKED BY: SB
DRAWN BY: TW	APPROVED BY: SB
DATE: 2025-02-26	RELEASED FOR CONSTR. DATE: 2025-02-26

GENERAL NOTES:

1. THIS DRAWING DEPICTION IS BASED ON OVERHEAD MODEL RSX, COORDINATE WITH OVERHEAD DOOR SUPPLIER AND PROVIDE AS-BUILT MARKUPS BASED ON SHOP DRAWINGS.
2. CLOUD INDICATES NEW WORK.
3. LEAVE ADDITIONAL CABLE SLACK AT THE UVCP-1 MARSHALLING PANEL FOR DCS INTEGRATION, WHEN THE PLC IS INSTALLED.
4. CONTRACTOR TO ADD NEW CONDUCTOR, USE TEW/MTW 300V, 105°, 12 AWG OR LARGER.
5. ADD NEW TERMINAL IN MARSHALLING PANEL, BELOW EXISTING.
6. ADD FERULES TO ALL STRANDED FIELD CONDUCTORS.

ENGINEERS GEOSCIENTISTS MANITOBA
Certificate of Authorization
AECOM Canada ULC
No. 4671

AECOM

	REVISIONS	DATE	DESIGN	CHECK
00	ISSUED FOR TENDER	2025-02-26	KA	MS

DESIGNED BY: MS	CHECKED BY: SB
DRAWN BY: KA	APPROVED BY: SB
SCALE: NTS	DATE: 2024-11-25
ISSUED FOR CONSTRUCTION BY:	DATE:
CONSULTANT NO.: U2-A001	

ENGINEER'S SEAL

PROVINCE OF MANITOBA
M. SARIC
Member
46571
REGISTERED PROFESSIONAL ENGINEER

2025-02-28 Rev. 00

Winnipeg

THE CITY OF WINNIPEG

WATER AND WASTE DEPARTMENT

NORTH END SEWAGE TREATMENT PLANT
UV DISINFECTION FACILITY
AUTOMATION
LOOP DIAGRAM
GARAGE DOOR

CITY DRAWING NUMBER	SHEET	REV.	SIZE
	001	00	B

B SIZE - 279mm x 432mm

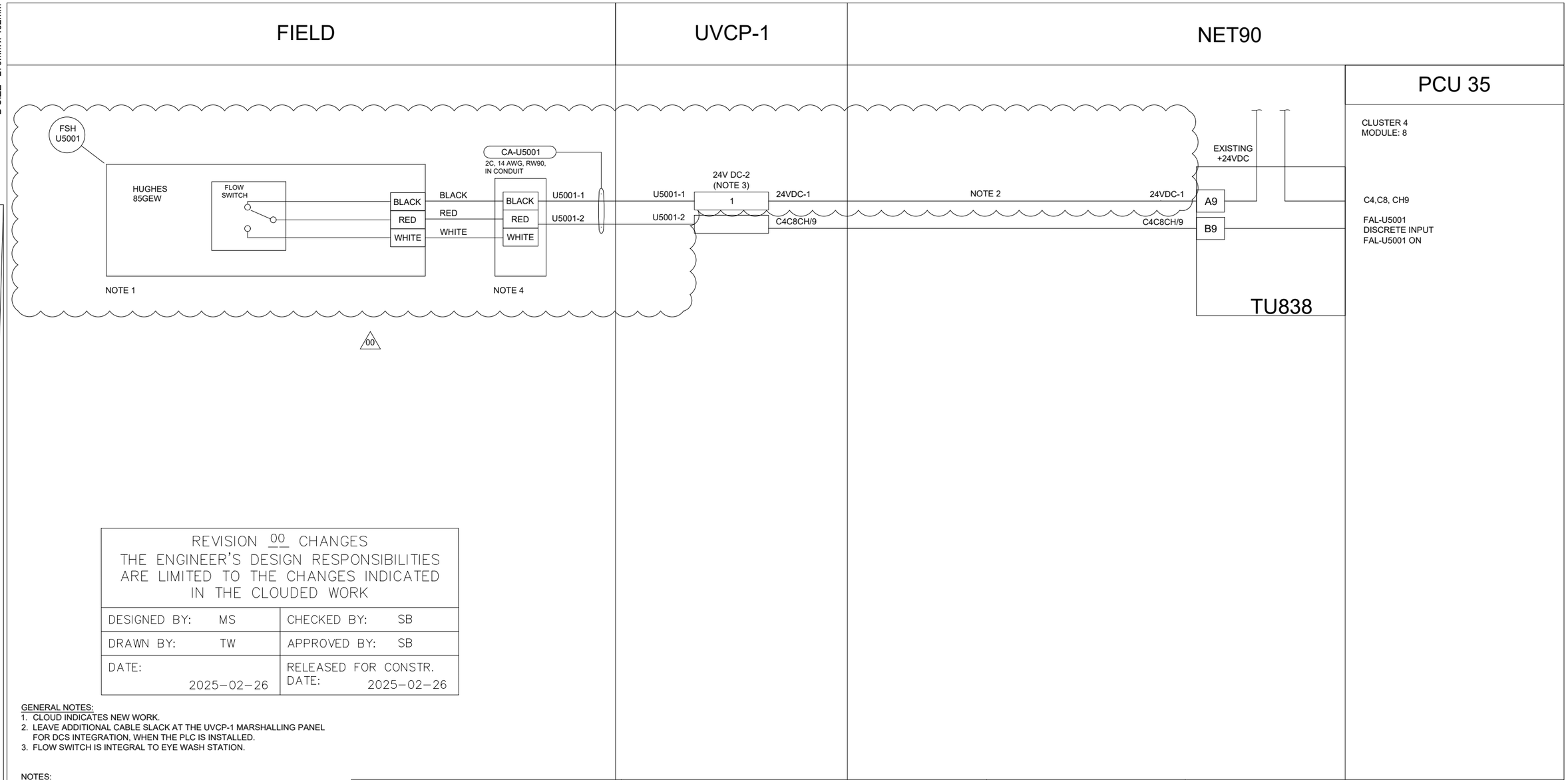

REVISION 00 CHANGES THE ENGINEER'S DESIGN RESPONSIBILITIES ARE LIMITED TO THE CHANGES INDICATED IN THE CLOUDED WORK	
DESIGNED BY: MS	CHECKED BY: SB
DRAWN BY: TW	APPROVED BY: SB
DATE: 2025-02-26	RELEASED FOR CONSTR. DATE: 2025-02-26

GENERAL NOTES:
1. CLOUD INDICATES NEW WORK.
2. LEAVE ADDITIONAL CABLE SLACK AT THE UVCP-1 MARSHALLING PANEL FOR DCS INTEGRATION, WHEN THE PLC IS INSTALLED.
3. FLOW SWITCH IS INTEGRAL TO EYE WASH STATION.

NOTES:
1. SWITCH TO BE WIRED FAIL SAFE.
2. CONTRACTOR TO ADD NEW CONDUCTOR, USE TEW/MTW 300V, 105°, 12 AWG OR LARGER.
3. ADD NEW TERMINAL IN MARSHALLING PANEL, BELOW EXISTING.
4. CONTRACTOR TO PROVIDE NEW JUNCTION BOX WITH TERMINAL BLOCKS.

ENGINEERS GEOSCIENTISTS MANITOBA
Certificate of Authorization
AECOM Canada ULC
No. 4671

AECOM

00	ISSUED FOR TENDER	2025-02-26	KA	MS
	REVISIONS	DATE	DESIGN	CHECK

DESIGNED BY: MS	CHECKED BY: SB
DRAWN BY: KA	APPROVED BY:
SCALE: NTS	DATE: 2024-01-08
ISSUED FOR CONSTRUCTION BY:	DATE:
CONSULTANT NO.: U2-A002	

ENGINEER'S SEAL
PROVINCE OF MANITOBA
M. SARIC
Member
46571
REGISTERED PROFESSIONAL ENGINEER
2025-02-28 Rev. 00

Winnipeg
THE CITY OF WINNIPEG
WATER AND WASTE DEPARTMENT

NORTH END SEWAGE TREATMENT PLANT
UV DISINFECTION FACILITY
AUTOMATION
LOOP DIAGRAM
FLOW SWITCH

CITY DRAWING NUMBER	SHEET	REV.	SIZE
	001	00	B

B SIZE - 279mm x 432mm

FIELD	UVCP-1	NET90	AI820

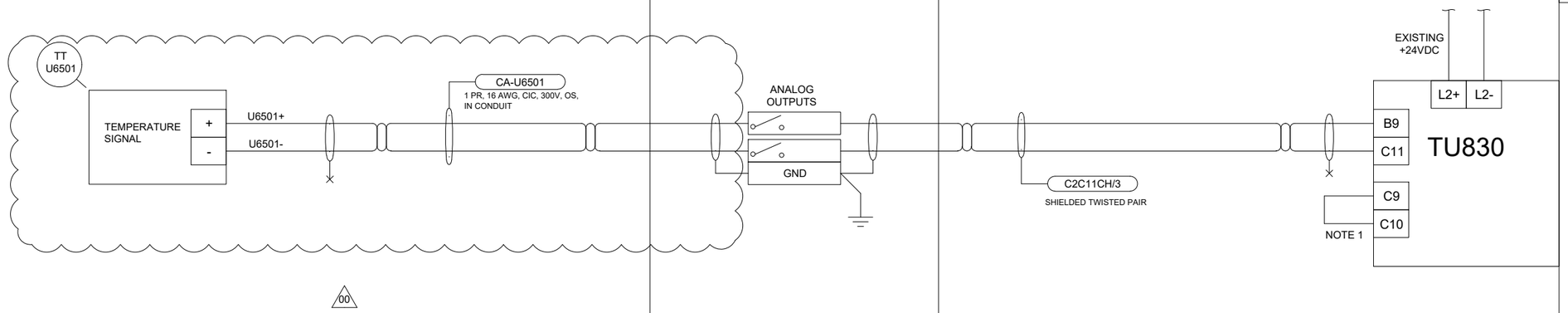

CLUSTER 2
MODULE: 11

C2, C11, CH3

TT-U6501
ANALOG INPUT (4-20MA)
STORAGE ROOM
TEMPERATURE

REVISION 00 CHANGES THE ENGINEER'S DESIGN RESPONSIBILITIES ARE LIMITED TO THE CHANGES INDICATED IN THE CLOUDED WORK	
DESIGNED BY: MS	CHECKED BY: SB
DRAWN BY: TW	APPROVED BY: SB
DATE: 2025-02-26	RELEASED FOR CONSTR. DATE: 2025-02-26

GENERAL NOTES:
1. CLOUD INDICATES NEW WORK.
2. LEAVE ADDITIONAL CABLE SLACK AT THE UVCP-1 MARSHALLING PANEL FOR DCS INTEGRATION, WHEN THE PLC IS INSTALLED.
3. ADD FERULES TO ALL STRANDED FIELD CONDUCTORS.

NOTES:
1. ADD JUMPER.

ENGINEERS GEOSCIENTISTS MANITOBA
Certificate of Authorization
AECOM Canada ULC
No. 4671

AECOM

00	ISSUED FOR TENDER	2025-02-26	KA	MS
	REVISIONS	DATE	DESIGN	CHECK

DESIGNED BY: MS	CHECKED BY: SB
DRAWN BY: TW	APPROVED BY: SB
SCALE: NTS	DATE: 2024-01-08
ISSUED FOR CONSTRUCTION BY:	DATE:
CONSULTANT NO.: U2-A003	

ENGINEER'S SEAL
PROVINCE OF MANITOBA
M. SARIC
Member
46571
REGISTERED PROFESSIONAL ENGINEER
2025-02-28 Rev. 00

Winnipeg
THE CITY OF WINNIPEG
WATER AND WASTE DEPARTMENT

NORTH END SEWAGE TREATMENT PLANT
UV DISINFECTION FACILITY
AUTOMATION
LOOP DIAGRAM
TT-U6501

CITY DRAWING NUMBER	SHEET	REV.	SIZE
	001	00	B

B SIZE - 279mm x 432mm

FIELD	UVCP-1	NET90

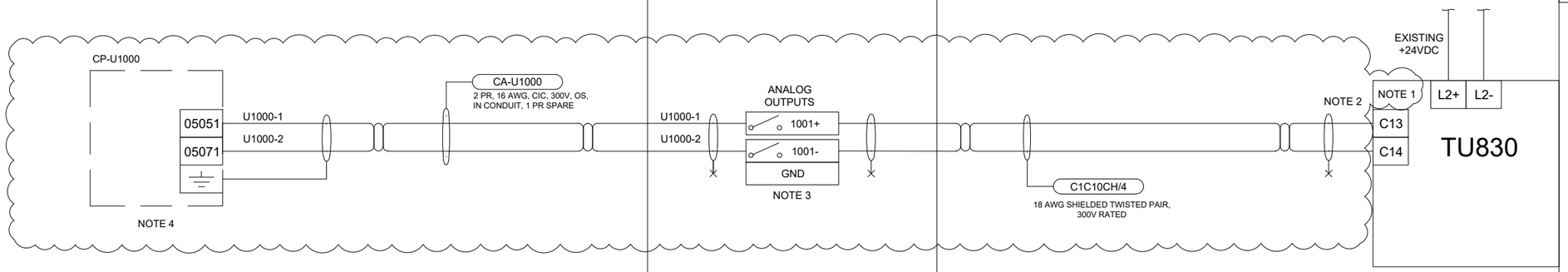

00

AO820

CLUSTER 1
MODULE: 9

C1, C9, CH4
CP-U1000
ANALOG OUTPUT (4-20mA)
CONTROL SYSTEM FLOW

REVISION 00 CHANGES THE ENGINEER'S DESIGN RESPONSIBILITIES ARE LIMITED TO THE CHANGES INDICATED IN THE CLOUDED WORK	
DESIGNED BY: MS	CHECKED BY: SB
DRAWN BY: TW	APPROVED BY: SB
DATE: 2025-02-26	RELEASED FOR CONSTR. DATE: 2025-02-26

GENERAL NOTES:
1. CLOUD INDICATES NEW WORK.
2. LEAVE ADDITIONAL CABLE SLACK AT THE UVCP-1 MARSHALLING PANEL FOR DCS INTEGRATION, WHEN THE PLC IS INSTALLED.
3. ADD FERULES TO ALL STRANDED FIELD CONDUCTORS.

NOTES:
1. CONFIGURE AO820 MODULE FOR 4-20 mA CONTROL.
2. DISCONNECT EXISTING CABLE AT TU830 AND PROVIDE NEW.
3. INSTALL NEW TERMINAL BLOCKS AS DEPICTED, MATCH EXISTING MAKE.
4. REFER TO UV VENDOR DRAWINGS FOR GROUNDING LOCATION.

ENGINEERS GEOSCIENTISTS MANITOBA
Certificate of Authorization
AECOM Canada ULC
No. 4671

AECOM

	REVISIONS	DATE	DESIGN	CHECK
00	ISSUED FOR TENDER	2025-02-26	TW	MS

DESIGNED BY: MS	CHECKED BY: SB
DRAWN BY: TW	APPROVED BY: SB
SCALE: NTS	DATE: 2024-01-08
ISSUED FOR CONSTRUCTION BY:	DATE:
CONSULTANTNO.: U2-A004	

ENGINEER'S SEAL
PROVINCE OF MANITOBA
M. SARIC
Member
46571
REGISTERED PROFESSIONAL ENGINEER
2025-02-28 Rev. 00

Winnipeg
THE CITY OF WINNIPEG
WATER AND WASTE DEPARTMENT

NORTH END SEWAGE TREATMENT PLANT
UV DISINFECTION FACILITY
AUTOMATION
LOOP DIAGRAM
FIC-U1001

CITY DRAWING NUMBER	SHEET	REV.	SIZE
	001	00	B