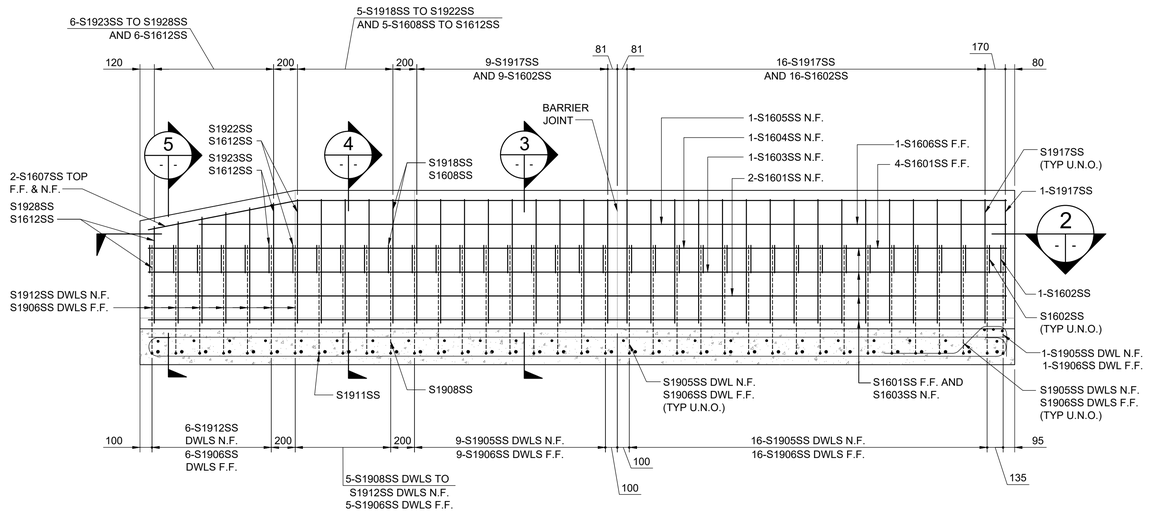

1 SOUTH APPROACH BARRIER ELEVATION - REINFORCING

- WEST TRAFFIC BARRIER AS SHOWN, EAST TRAFFIC BARRIER SIMILAR

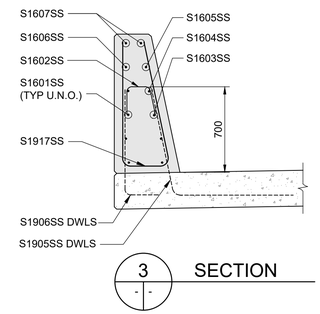

3 SECTION

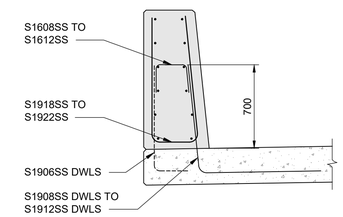

4 SECTION

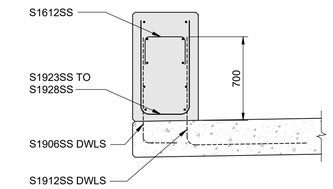

5 SECTION

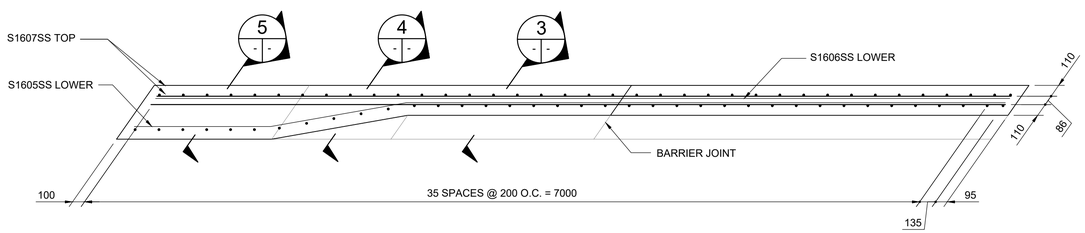

2 SECTION

ENGINEERS GEOSCIENTISTS MANITOBA
Certificate of Authorization
Tetra Tech Canada Inc.
No. 6499

B.M.
ELEV.

NO.	REVISIONS	DATE	BY
0	ISSUED FOR TENDER	25.08.07	SA

TETRA TECH

DESIGNED BY	RL	REVIEWED BY	SA
DRAWN BY	AM	APPROVED BY	KA
SCALE:	1 : 25	ACCEPTED BY / DATE	CAM WARD, P.ENG. 25.08.07
DATE	25.08.07		

PROVINCE OF MANITOBA
S.Y.I. AWAD
Member
31981
2025-08-07
REGISTERED PROFESSIONAL ENGINEER

CONSULTANT DRAWING NO.
704-INF.MBI03007.01-DWG-S2234

Winnipeg
THE CITY OF WINNIPEG
PUBLIC WORKS DEPARTMENT
ENGINEERING DIVISION

LAGIMODIERE TWIN OVERPASSES
OVER CPKC KEEWATIN
REHABILITATION AND RELATED WORKS

CITY DRAWING NUMBER
B123-25-2234

SHEET 34 OF 48

NORTHBOUND STRUCTURE
SOUTH APPROACH - APPROACH SLAB
BARRIER REINFORCING DETAILS

2234