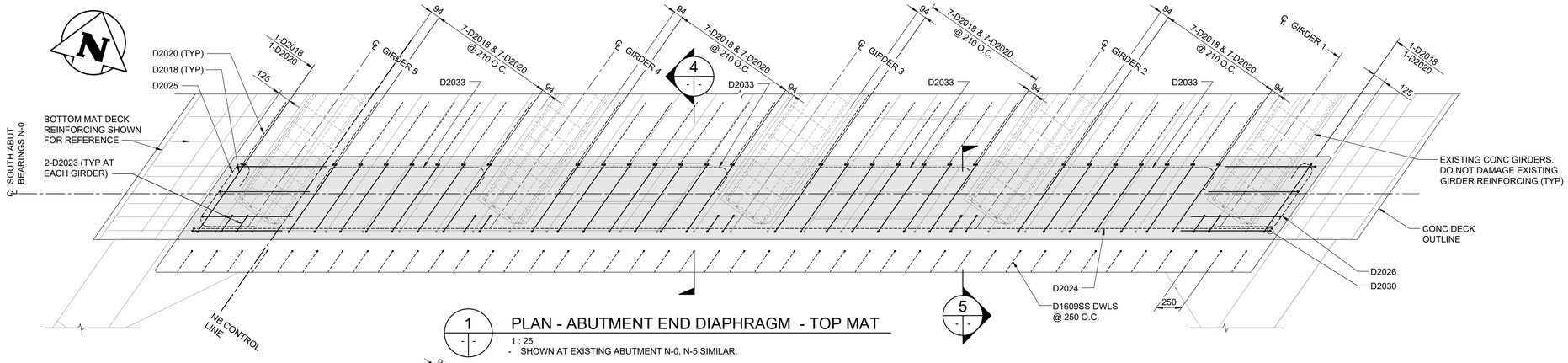


1 PLAN - ABUTMENT END DIAPHRAGM - TOP MAT

1 : 25

- SHOWN AT EXISTING ABUTMENT N-0, N-5 SIMILAR.

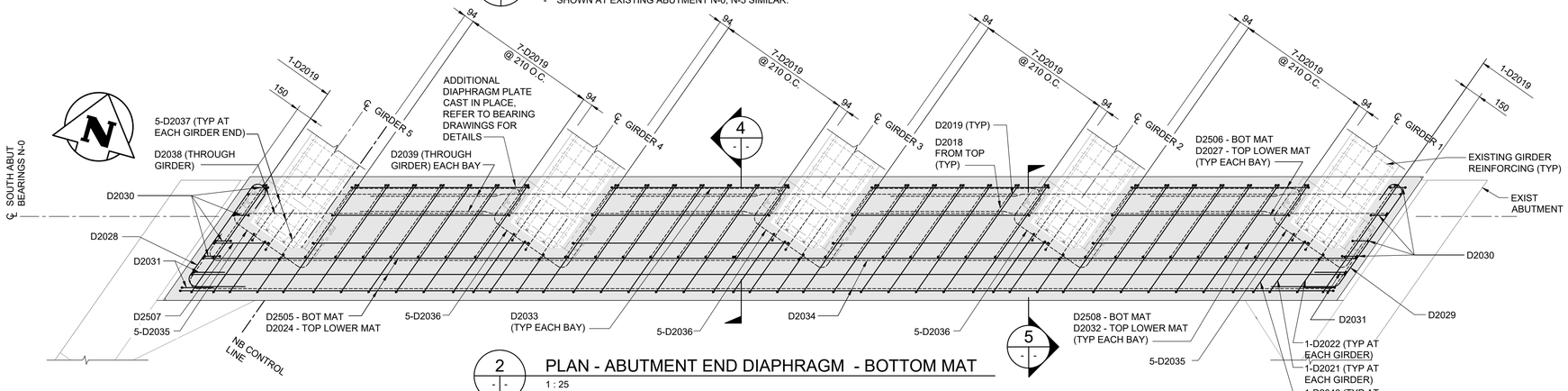


2 PLAN - ABUTMENT END DIAPHRAGM - BOTTOM MAT

1 : 25

- SHOWN AT EXISTING ABUTMENT N-0, N-5 SIMILAR.
- TOP LOWER MAT SIMILAR EXCEPT AS NOTED

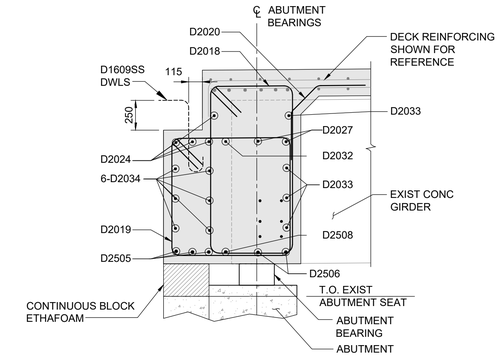


4 SECTION

1 : 25

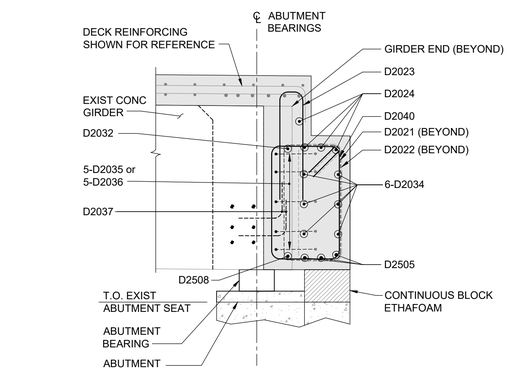


5 SECTION

1 : 25

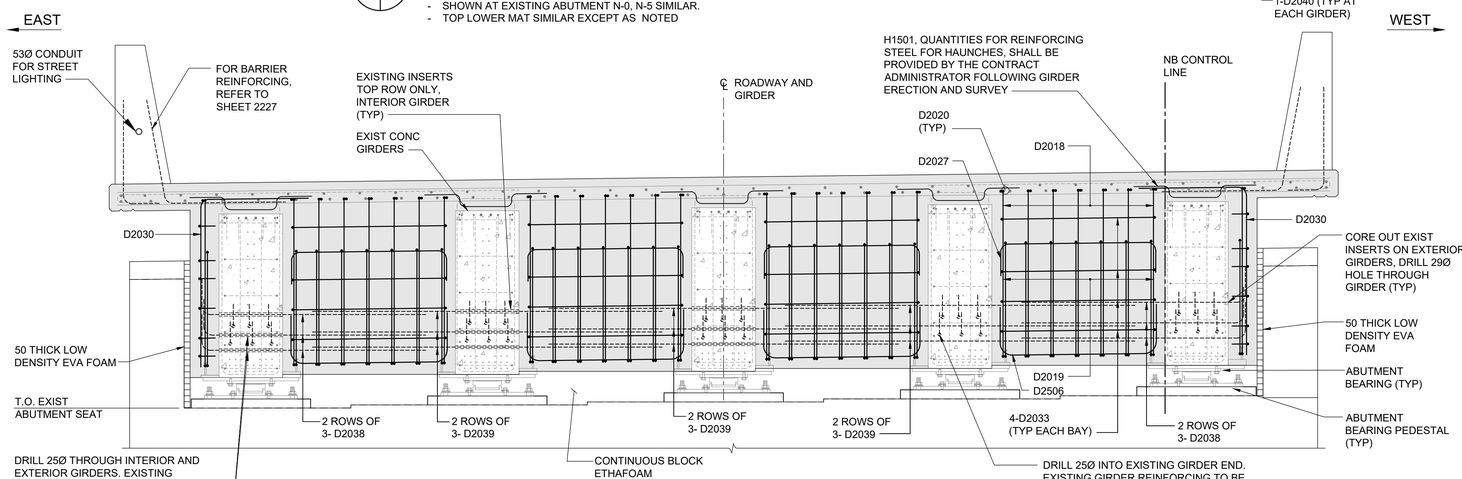


3 ELEVATION - ABUTMENT END DIAPHRAGM

1 : 25

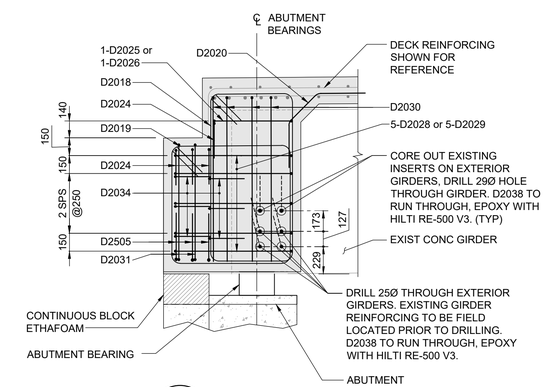


6 END VIEW

1 : 25

| NO. | REVISIONS | DATE | BY |
|---|---|---|---|
| 0 | ISSUED FOR TENDER | 25.08.07 | TN |

B.M. ELEV.

ENGINEERS GEOSCIENTISTS MANITOBA
Certificate of Authorization
Tetra Tech Canada Inc.
No. 6499

TETRA TECH

| | | | |
|---|---|---|---|
| DESIGNED BY | TN | REVIEWED BY | SA |
| DRAWN BY | EV | APPROVED BY | KA |
| SCALE: | AS NOTED | ACCEPTED BY / DATE | CAM WARD, P.ENG. 25.08.07 |
| DATE | 25.08.07 | | |

PROVINCE OF MANITOBA
T.A.B. NEIRINCK
Member
37947
2025-08-07
REGISTERED PROFESSIONAL ENGINEER

CONSULTANT DRAWING NO.
704-INF.MBI03007.01-DWG-S2226

Winnipeg

THE CITY OF WINNIPEG
PUBLIC WORKS DEPARTMENT
ENGINEERING DIVISION

LAGIMODIERE TWIN OVERPASSES
OVER CPKC KEEWATIN
REHABILITATION AND RELATED WORKS

CITY DRAWING NUMBER: B123-25-2226

SHEET 26 OF 48

NORTHBOUND STRUCTURE
DECK REINFORCING DETAILS
SHEET 4 OF 5

2226