BILL OF REINFORCING - BLACK STEEL BARS

	MARK	NO. BARS	SIZE	LENGTH	TYPE	A	B	C	D	E	F	G	H	J	K	O	R	TOTAL (m)	MASS (kg)
NORTH GRADE BEAM	R2001	14	20	5 200	STR													72.80	171.44
	R2002	14	20	7 900	STR													110.60	260.46
	R2003	98	20	3 365	17		1070	1225	1070									329.77	776.61
	R2004	4	20	3 375	17		1070	1235	1070									13.50	31.79
	R2005	4	20	3 410	17		1070	1270	1070									13.64	32.12
	R2006	4	20	3 470	17		1070	1330	1070									13.88	32.69
	R2007	4	20	3 545	17		1070	1405	1070									14.18	33.39
	R2008	4	20	3 640	17		1070	1500	1070									14.56	34.29
	R2009	12	20	2 700	17		1070	560	1070									32.40	76.30
	R2010	12	20	1 570	T5	200	1070					300						18.84	44.37
	R2011	51	20	2 700	17		1070	560	1070									137.70	324.28
	R2012	57	20	2 685	17		900	885	900									153.05	360.42
	R2013	2	20	2 645	17		900	845	900									5.29	12.46
	R2014	2	20	2 680	17		900	880	900									5.36	12.62
	R2015	2	20	2 740	17		900	940	900									5.48	12.91
	R2016	2	20	2 815	17		900	1015	900									5.63	13.26
	R2017	10	20	2 620	17		600	1420	600									26.20	61.70
	R2018	6	20	2 210	17		600	1010	600									13.26	31.23
	R2019	2	20	2 025	17		600	825	600									4.05	9.54
	R2020	6	20	2 440	17		600	1240	600									14.64	34.48
	R2501	16	25	5 500	STR													88.00	345.40
	R2502	16	25	7 900	STR													126.40	496.12
	R2503	4	25	6 640	STR													26.56	104.25
SOUTH STRUCTURAL SLAB	T2001	30	20	9 000	STR													270.00	635.85
	T2002	30	20	4 400	STR													132.00	310.86
	T2501	101	25	7 760	1	280	7200					280						783.76	3076.26
NORTH STRUCTURAL SLAB																			
	T2001	30	20	9 000	STR													270.00	635.85
	T2002	30	20	4 400	STR													132.00	310.86
	T2501	101	25	7 760	1	280	7200					280						783.76	3076.26
SOUTH APPROACH																			
	S2501	62	25	7 720	1	280	7160					280						478.64	1878.66
	S2502	36	25	5 500	STR													198.00	777.15
	S2503	36	25	8 500	STR													306.00	1201.05
NORTH APPROACH																			
	S2501	62	25	7 720	1	280	7160					280						478.64	1878.66
	S2502	36	25	5 500	STR													198.00	777.15
	S2503	36	25	8 500	STR													306.00	1201.05
SLOPE PROTECTION	U1001	82	10	2 695	45	250	270	590	190	1395			190		195			220.99	173.48
	U1002	164	10	2 535	46	500	740	195	600			500	715/585		175/145			415.74	326.36
	U1003	59	10	2 515	47	750	460	195	610			500	445/595		110/150			148.39	116.48
	U1004	24	10	2 785	48	500	600	195	740			750	585/715		145/175			66.84	52.47
	U1501	41	15	8 610	30	170	1790	6650					1615		6450			353.01	554.23
	U1502	82	15	12 000	STR													984.00	1544.88
	U1503	31	15	6 095	30	170	1325	4600					330		4590			188.95	296.64
	U1504	41	15	10 210	30	170	1790	8250					2000		8000			418.61	657.22
	U1505	30	15	4 495	30	170	1325	3000					215		2990			134.85	211.71
	U1506	10	15	4 660	1	170	4490											46.60	73.16
	U1507	11	15	3 170	1	170	3000											34.87	54.75
	U1508	208	15	4 220	16			2110	2110				2100		170			877.76	1378.08
	U1509	102	15	8 615	STR													878.73	1379.61
	U1510	112	15	2 205	STR													246.96	387.73
	U1511	16	15	4 215	STR													67.44	105.88
	U1512	3	15	7 705	16			600	7105				2250		6740			23.12	36.29
	U1513	1	15	6 735	16			600	6135				1940		5815			6.74	10.57
	U1514	1	15	5 585	16			600	4985				1575		4730			5.59	8.77
	U1515	1	15	4 430	16			600	3830				1210		3635			4.43	6.96
	U1516	1	15	3 275	16			600	2675				850		2540			3.28	5.14
	U1517	1	15	2 150	16			600	1550				490		1475			2.15	3.38
	U1518	1	15	1 035	16			600	435				135		415			1.04	1.62
	U1519	16	15	7 040	16			600	6440				2035		6110			112.64	176.84
	U1520	25	15	4 860	STR													121.50	190.76
	U1521	1	15	610	STR													0.61	0.96
	U1522	1	15	760	STR													0.76	1.19

BILL OF REINFORCING - BLACK STEEL BARS

	MARK	NO. BARS	SIZE	LENGTH	TYPE	A	B	C	D	E	F	G	H	J	K	O	R	TOTAL (m)	MASS (kg)
SLOPE PROTECTION	U1523	1	15	830	STR													0.83	1.30
	U1524	1	15	900	STR													0.90	1.41
	U1525	1	15	970	STR													0.97	1.52
	U1526	1	15	1 040	STR													1.04	1.63
	U1527	1	15	1 110	STR													1.11	1.74
	U1528	1	15	1 180	STR													1.18	1.85
	U1529	1	15	1 250	STR													1.25	1.96
	U1530	1	15	1 320	STR													1.32	2.07
	U1531	1	15	1 400	STR													1.40	2.20
	U1532	1	15	1 470	STR													1.47	2.31
	U1533	1	15	1 540	STR													1.54	2.42
	U1534	1	15	1 610	STR													1.61	2.53
	U1535	1	15	1 680	STR													1.68	2.64
	U1536	1	15	1 755	STR													1.76	2.76
	U1537	1	15	1 820	STR													1.82	2.86
	U1538	1	15	1 890	STR													1.89	2.97
	U1539	1	15	1 960	STR													1.96	3.08
	U1540	1	15	2 030	STR													2.03	3.19
	U1541	1	15	2 100	STR													2.10	3.30
	U1542	1	15	2 170	STR													2.17	3.41
	U1543	1	15	2 240	STR													2.24	3.52
	U1544	1	15	2 310	STR													2.31	3.63
	U1545	1	15	2 380	STR													2.38	3.74
	U1546	1	15	2 445	STR													2.45	3.84
	U1547	2	15	2 070	STR													4.14	6.50
	U1548	10	15	1 895	STR													18.95	29.75
	U1549	2	15	1 720	STR													3.44	5.40
	U1550	2	15	1 560	STR													3.12	4.90
	U1551	2	15	1 370	STR													2.74	4.30
	U1552	4	15	6 075	STR													24.30	38.15
																		TOTAL BLACK STEEL MASS	26 977.83 kg

NOTES:

1. ALL DIMENSIONS GIVEN IN THE BENDING DIAGRAM ARE OUT TO OUT, EXCEPT RADII AND EXTENSIONS ON 90°, 135° & 180° HOOKS. EXTENSIONS ON 90°, 135° & 180° HOOKS ARE THE "A" OR "G" DIMENSIONS FOR THE STANDARD 90°, 135° & 180° HOOKS REFERENCED FROM THE RSIC " MANUAL OF STANDARD PRACTICE". RADII ARE INSIDE DIMENSIONS. ALL REINFORCING STEEL SHALL CONFORM TO THE LATEST EDITION OF CAN/CSA-S6 CLAUSE 8.14 "DETAILS OF REINFORCEMENT AND SPECIAL DETAILING PROVISIONS", UNLESS NOTED OTHERWISE IN BILL OF REINFORCING STEEL.
2. ALL REINFORCING SHALL BE DEFORMED STEEL, UNLESS NOTED OTHERWISE IN BILL OF REINFORCING STEEL.
3. ALL REINFORCING STEEL SHALL CONFORM TO THE LATEST EDITION OF CAN/CSA G30.18 "CARBON STEEL BARS FOR CONCRETE REINFORCEMENT" GRADE 400W, UNLESS NOTED OTHERWISE IN THE BILL OF REINFORCING STEEL.
4. LIKE BARS SHALL BE BUNDLED, SECURELY TIED AND IDENTIFIED AS TO MARK AND SITE NUMBER BY APPROPRIATE MEANS. ALL OTHER ITEMS TO BE IDENTIFIED IN A SIMILAR FASHION.
5. UNLESS OTHERWISE NOTED DIAMETER "D" IS THE SAME ALL HOOKS AND BENDS ON A BAR. THERE SLOPE DIFFERS FROM 45° DIMENSIONS "H" AND "K" MUST BE SHOWN.
6. LEGS IDENTIFIED AS A* AND G*, LEG ANGLE TO BE BENT TO MATCH SLOPE PROTECTION SLOPE ANGLE. U1002: 4 TO 1, U1003: 3 TO 1, U1004: 4 TO 1.

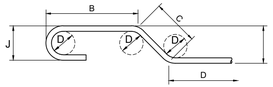

ENLARGED VIEW
BAR BENDING DETAILS

BENDING DIAGRAMS:

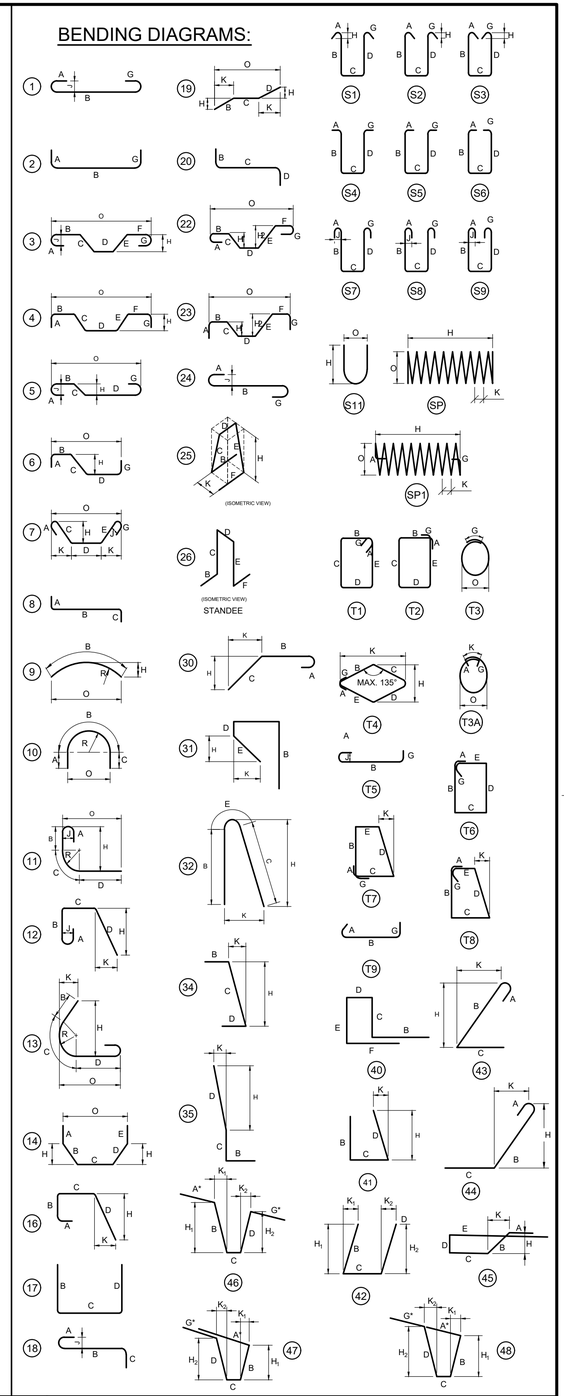

ENGINEERS GEOSCIENTISTS MANITOBA
Certificate of Authorization
Tetra Tech Canada Inc.
No. 6499

NO.	REVISIONS	DATE	BY
0	ISSUED FOR TENDER	25.08.07	SA

B.M.
ELEV.

TETRA TECH

DESIGNED BY	RL	REVIEWED BY	SA
DRAWN BY	AM	APPROVED BY	KA
SCALE:	AS NOTED	ACCEPTED BY	CAM WARD, P.ENG.
DATE	25.08.07	DATE	25.08.07

PROVINCE OF MANITOBA
S.Y.I. AWAD
Member 31981
2025-08-27
REGISTERED PROFESSIONAL ENGINEER

CONSULTANT DRAWING NO.
704-INF.MBI03007.01-DWG-S2146

Winnipeg

THE CITY OF WINNIPEG
PUBLIC WORKS DEPARTMENT
ENGINEERING DIVISION

LAGIMODIERE TWIN OVERPASSES
OVER CPKC KEEWATIN
REHABILITATION AND RELATED WORKS

SOUTHBOUND STRUCTURE
BILL OF REINFORCING
SHEET 2 OF 3

CITY DRAWING NUMBER
B123-25-2146

SHEET 46 OF 47

2146