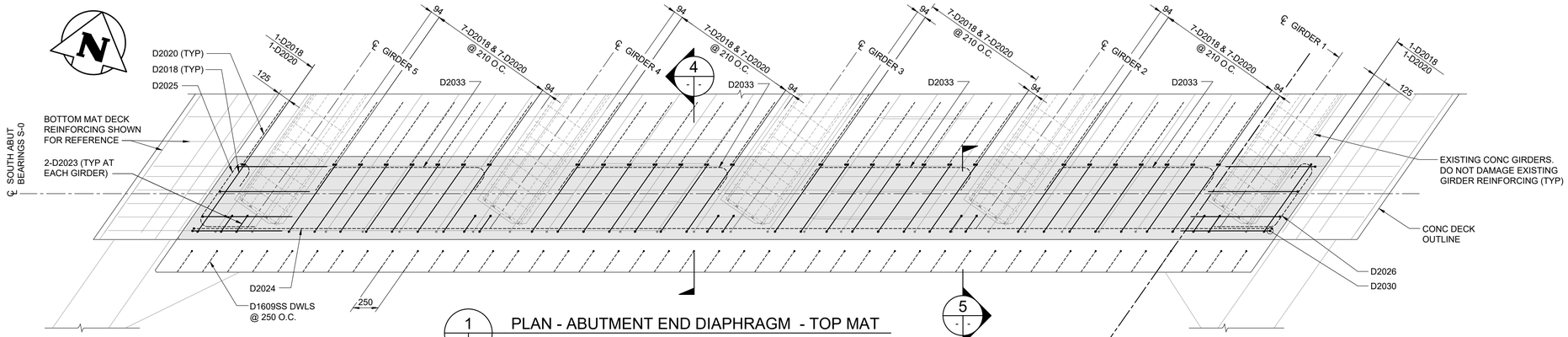

1 PLAN - ABUTMENT END DIAPHRAGM - TOP MAT

1 : 25

- SHOWN AT EXISTING ABUTMENT S-0, S-5 SIMILAR.

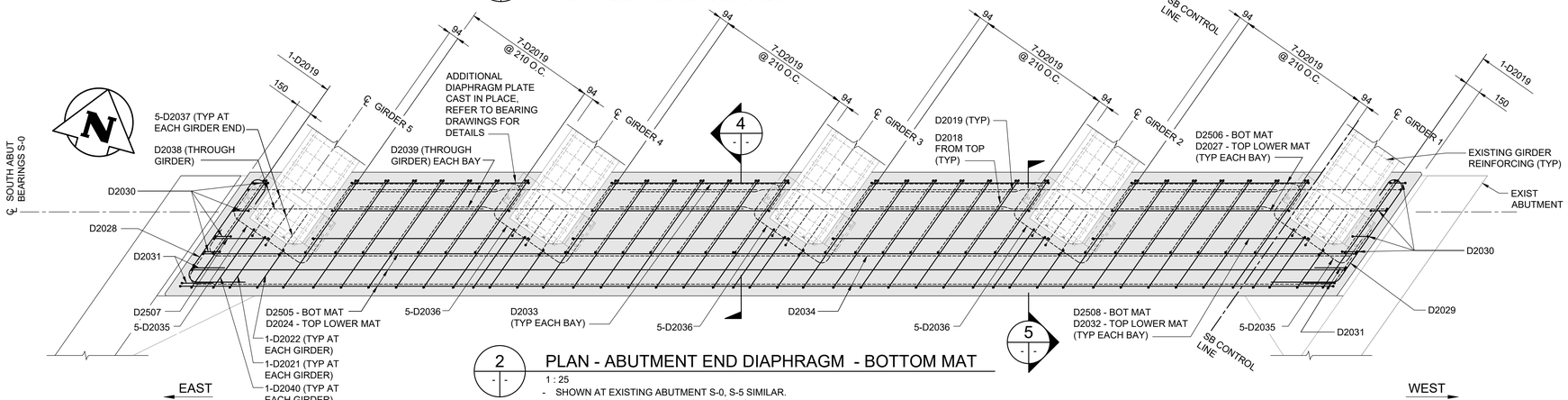

2 PLAN - ABUTMENT END DIAPHRAGM - BOTTOM MAT

1 : 25

- SHOWN AT EXISTING ABUTMENT S-0, S-5 SIMILAR.
- TOP LOWER MAT SIMILAR EXCEPT AS NOTED

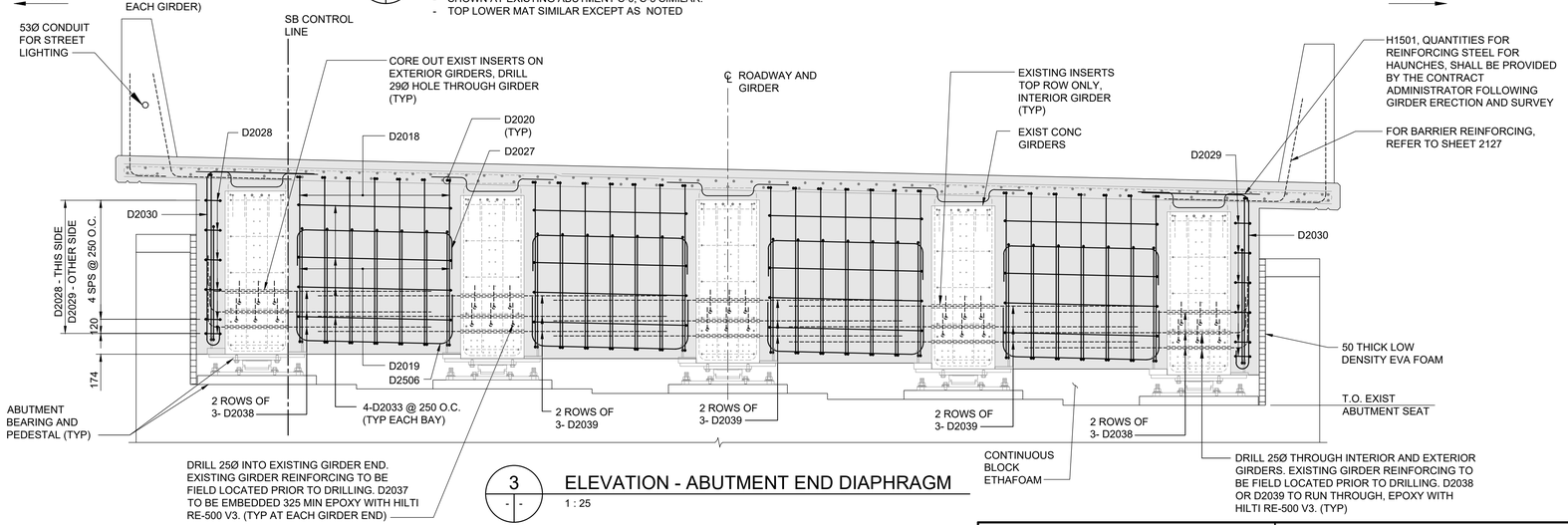

3 ELEVATION - ABUTMENT END DIAPHRAGM

1 : 25

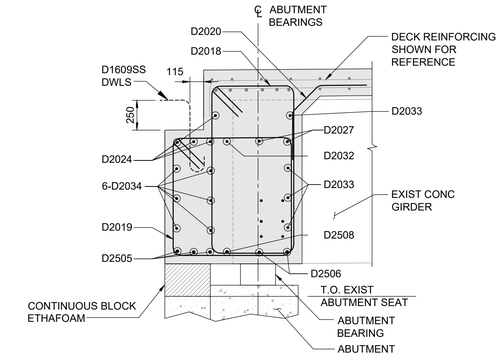

4 SECTION

1 : 25

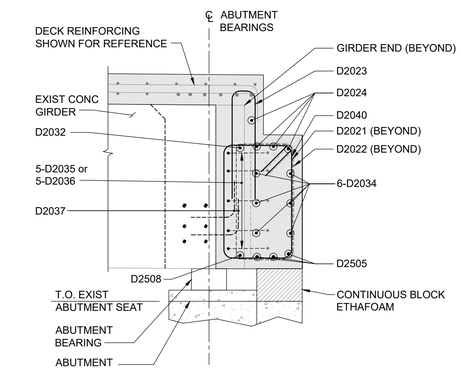

5 SECTION

1 : 25

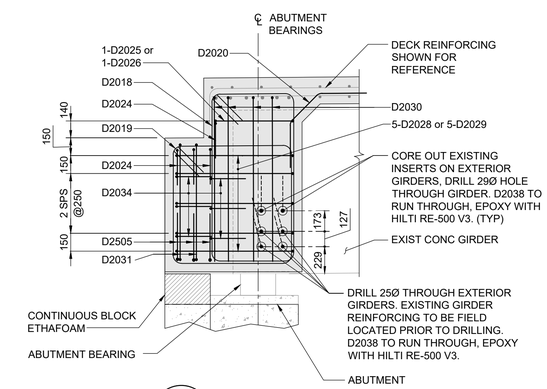

6 END VIEW

1 : 25

B.M. ELEV.			
0	ISSUED FOR TENDER	25.08.07	TN
NO.	REVISIONS	DATE	BY

ENGINEERS GEOSCIENTISTS MANITOBA
Certificate of Authorization
Tetra Tech Canada Inc.
No. 6499

TETRA TECH

DESIGNED BY	TN	REVIEWED BY	SA
DRAWN BY	EV	APPROVED BY	KA
SCALE:	AS NOTED	ACCEPTED BY	CAM WARD, P.ENG.
DATE	25.08.07	DATE	25.08.07

PROVINCE OF MANITOBA
T.A.B. NEIRINCK
Member
37947
2025-08-07
REGISTERED PROFESSIONAL ENGINEER

CONSULTANT DRAWING NO.
704-INF.MBI03007.01-DWG-S2126

Winnipeg

THE CITY OF WINNIPEG
PUBLIC WORKS DEPARTMENT
ENGINEERING DIVISION

LAGIMODIERE TWIN OVERPASSES
OVER CPKC KEEWATIN
REHABILITATION AND RELATED WORKS

CITY DRAWING NUMBER: B123-25-2126

SHEET 26 OF 47

SOUTHBOUND STRUCTURE
DECK REINFORCING DETAILS
SHEET 4 OF 5

2126