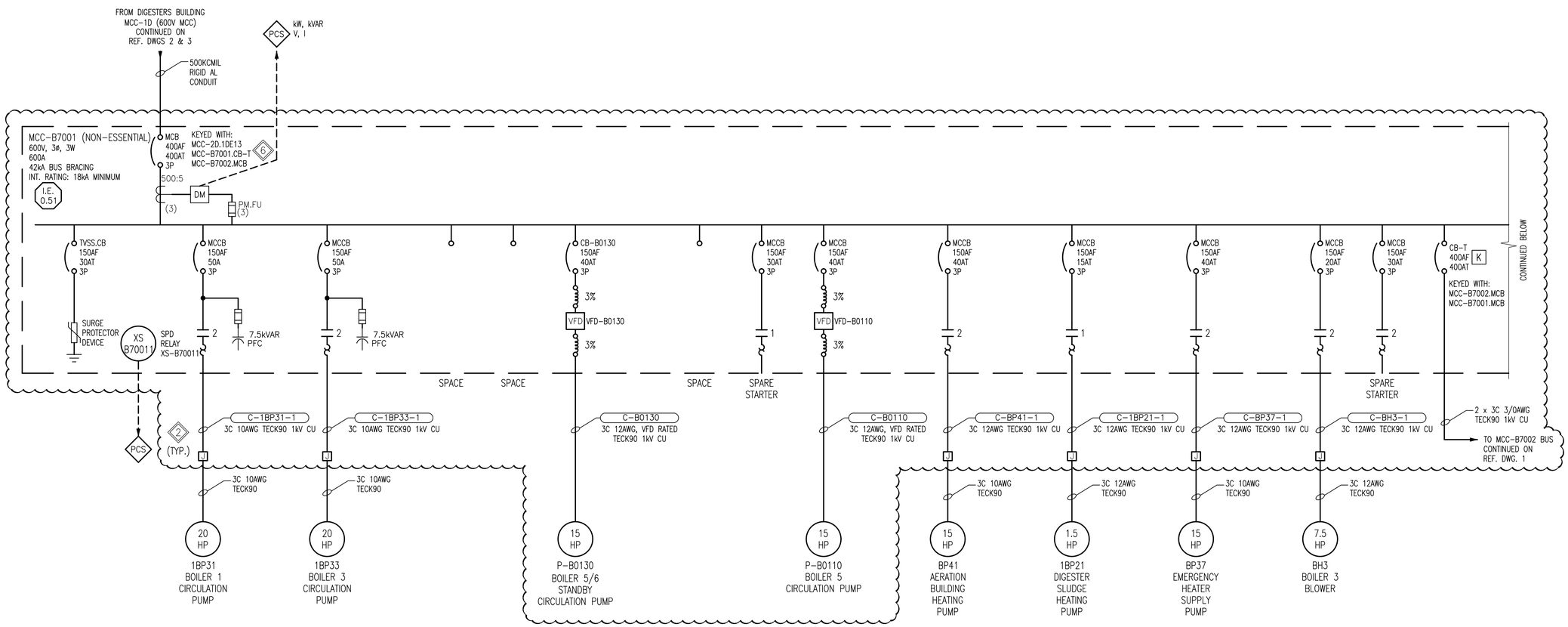

GENERAL NOTES:

1. ENGINEER'S SEAL APPLIES TO CLOUDED AREA ONLY.
2. EXISTING LOADS TO BE DISCONNECTED FROM OLD MCC AND RECONNECTED TO NEW.
3. EXISTING CABLE GAUGES ARE BASED ON EXISTING DOCUMENTATION AND HAVE NOT BEEN INDEPENDENTLY VERIFIED IN THE FIELD.
4. THE EXISTING #2/0 AWG BARE COPPER MCC GROUNDING CONDUCTOR SHALL BE RETAINED FOR CONNECTION TO THE NEW MCC. PROTECT THE EXISTING GROUNDING CONDUCTOR FROM MECHANICAL DAMAGE THROUGHOUT CONSTRUCTION.

KEYNOTES:

1. EXISTING TRANSFORMER SHALL BE RELOCATED. EXTEND PRIMARY AND SECONDARY FEEDER CABLES AS REQUIRED. REFER TO REFERENCE DRAWING 6 FOR NEW LOCATION.
2. THE EXISTING EQUIPMENT FEEDER CABLE SHALL REMAIN. EXTEND THE FEEDER CABLE AND PROVIDE A TERMINATION JUNCTION BOX. THE TERMINATION JUNCTION BOX SHALL INCLUDE TERMINAL BLOCKS AND BE MOUNTED ABOVE THE MCC WITH UNISTRUT CHANNEL SUPPORT.
1. INDIVIDUALLY SHOWN BOXES ARE SCHEMATIC. TERMINATION POINTS MAY BE CONSOLIDATED INTO LARGER BOXES OF MULTIPLE TERMINATIONS. AMALGAMATED BOXES MUST ONLY CONTAIN CABLES OF ONE MCC. BOXES CONTAINING BOTH MCC-B7001 AND MCC-B7002-ASSOCIATED CABLING SPLICES ARE NOT PERMITTED.
3. REFER TO REFERENCE DRAWING 4 FOR DETAILS ON EXISTING PANELBOARD.
4. BOILER PACKAGE INCLUDES CONTROL PANEL AND 15HP BLOWER MOTOR.
5. REFER TO REFERENCE DRAWING 5 FOR DETAILS ON EXISTING PANELBOARD.
6. RECONNECT EXISTING INTERLOCK CONNECTION BETWEEN DIGESTER MCC FEEDER BREAKER. REFER TO REFERENCE DRAWING 3.

NO.	DRAWING NUMBER	REFERENCE DRAWING TITLE
10	–	–
9	–	–
8	–	–
7	–	–
6	1-0101-EGAD-B001-001	EQUIPMENT LAYOUT
5	1-0101-ESCH-B001-001	PANEL BOARD SCHEDULE
4	NEP-1315	BOILER BUILDING – ELECTRICAL – CONTROL ROOM/FLARE STACK
3	1-0101D-E0007	DIGESTERS SINGLE LINE DIAGRAM EAST ELECTRICAL ROOM DISTRIBUTION
2	1-0101A-E0003	4160V ELECTRICAL DISTRIBUTION SWITCHING DIAGRAM
1	1-0101-ESLD-B002-001	MCC-B7002 SINGLE LINE DIAGRAM

REFERENCE DRAWINGS

ENGINEERS GEOSCIENTISTS MANITOBA
Certificate of Authorization
KGS Group
No. 245

B.M.
ELEV.

CONSTRUCTION COMPLETION DATE: YYYY MM DD

NO.	REVISIONS	DATE	BY
1	RE-ISSUED FOR CONSTRUCTION	2025 04 11	CLR
0	ISSUED FOR CONSTRUCTION	2025 03 25	CLR

KGS GROUP

DESIGNED BY	DG	CHECKED BY	CLR
DRAWN BY	DIS	APPROVED BY	CLR
SCALE:	AS SHOWN	RELEASED FOR CONSTRUCTION	
DATE	2024 08 06	DATE	

PLOT DATE: 2025 04 11

ENGINEER'S SEAL
PROVINCE OF MANITOBA
C.L. ROBINSON
Member
35963
2025-04-11
REGISTERED PROFESSIONAL ENGINEER

CONSULTANT DRAWING NUMBER
23-0107-010_PB_E0-01

BID OPPORTUNITY: 277-2025
CONTRACT NUMBER:

Winnipeg

THE CITY OF WINNIPEG
WATER AND WASTE DEPARTMENT
ENGINEERING DIVISION

NORTH END SEWAGE TREATMENT PLANT (NEWPCC)
NEWPCC BOILER REPLACEMENT 2025-2026
AREA B – BOILER ROOM

ELECTRICAL
MCC-B7001 SINGLE LINE DIAGRAM

CITY DRAWING NUMBER 1-0101-ESLD-B001-001
SHEET 1 OF 1

FILE PATH: R:\Projects\2023\23-0107-010\Dwg\Elec\2_PermBoiler\
FILE NAME: 1-0101-ESLD-B001-001.dwg