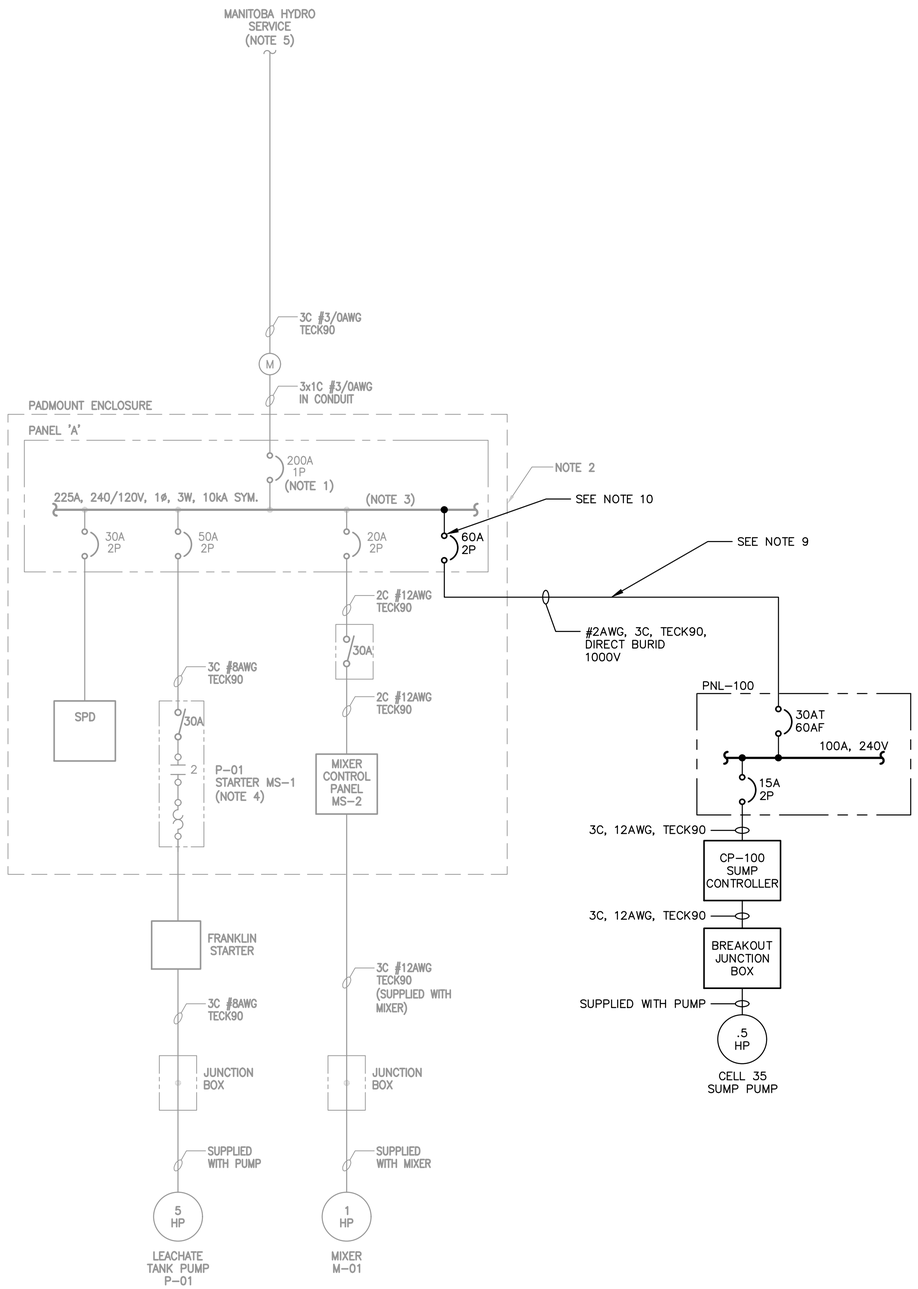


1 LEACHATE SYSTEM SINGLE LINE DIAGRAM

SCALE: N.T.S.

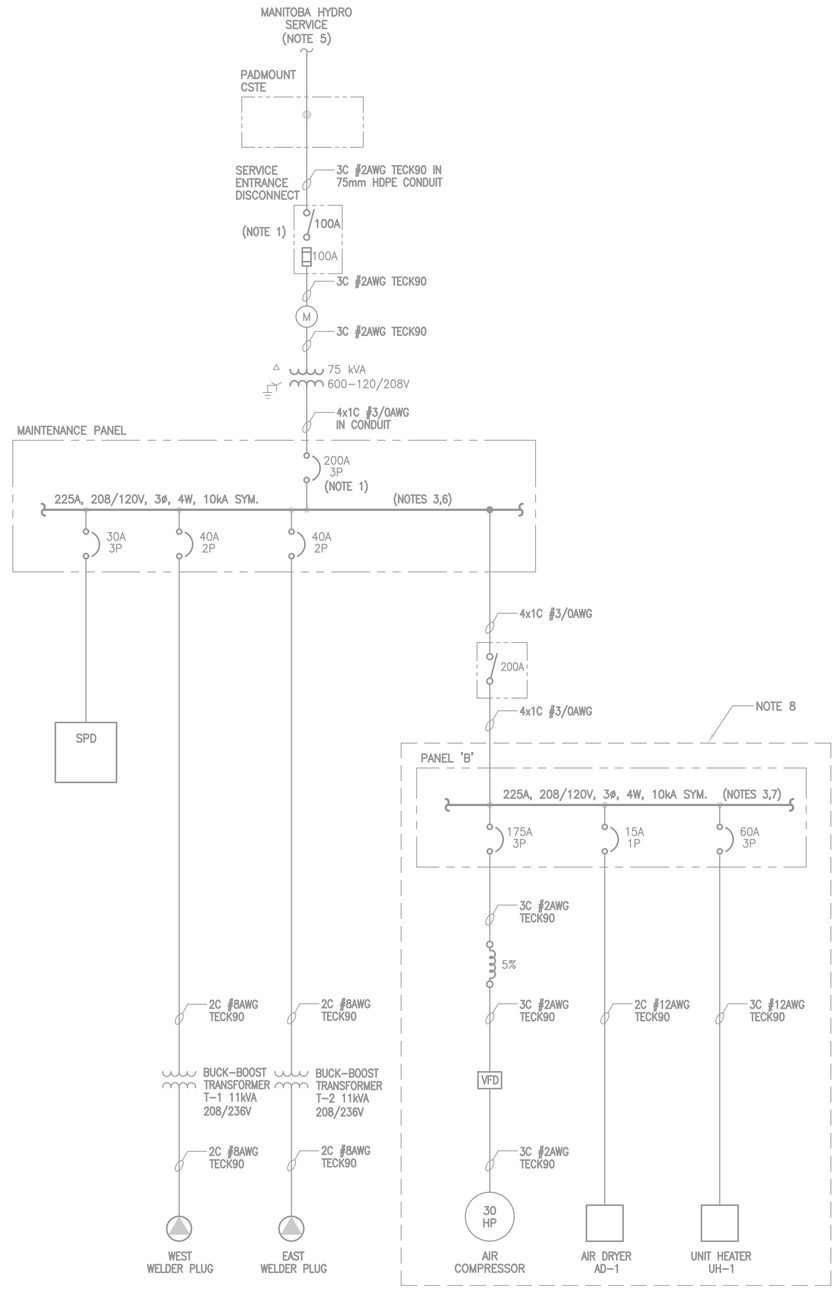


2 MAINTENANCE BUILDING AND INTERMODAL CONTAINER BUILDING PARTIAL SINGLE LINE DIAGRAM

SCALE: N.T.S.

## NOTES:

1. BREAKER OR FUSED DISCONNECT IS SERVICE ENTRANCE RATED.
2. EQUIPMENT INDICATED IS LOCATED WITHIN PADMOUNT ENCLOSURE.
3. REFER TO REF. SHEET 38 FOR ALL OTHER CIRCUITS CONNECTED TO PANEL.
4. SEE REF. SHEET 39 FOR MOTOR STARTER SCHEMATIC.
5. CONTRACTOR COORDINATED ALL ELECTRICAL SERVICE REQUIREMENTS WITH MANITOBA HYDRO.
6. MAINTENANCE PANEL IS EQUIPPED WITH FEED THROUGH LUGS TO SUPPLY PANEL 'B' IN COMPRESSOR BUILDING.
7. REFER TO AIR COMPRESSOR BUILDING SHOP DRAWINGS FOR PANEL AND BREAKER RATINGS FOR PANEL 'B'.
8. REFER TO AIR COMPRESSOR BUILDING SHOP DRAWINGS FOR ELECTRICAL EQUIPMENT PROVIDED.
9. RUN NEW BURIED CABLE TO SUMP STATION.
10. REPLACE EXISTING 30A 2P WITH NEW 60A 2P. SALVAGE AND RETURN EXISTING BREAKER TO THE CITY.
11. SCOPE OF WORK IS SHOWN AS DARKER LINE WEIGHT. GREY LINE WEIGHT INDICATES EXISTING EQUIPMENT.

## LEGEND

- BREAKER
- OVERLOAD
- DISCONNECT SWITCH
- M — SERVICE METER
- SPD — SURGE PROTECTION DEVICE
- WELDER PLUG
- REACTOR
- VFD — VARIABLE FREQUENCY DRIVE

TENDER NO. 107–2025

ENGINEERS GEOSCIENTISTS MANITOBA
Certificate of Authorization
AECOM Canada ULC
No. 4671

METRIC
WHOLE NUMBERS INDICATE MILLIMETRES
DECIMALIZED NUMBERS INDICATE METRES

WARNING

IF POWER EQUIPMENT OR EXPLOSIVES ARE TO BE USED FOR EXCAVATION ON THIS PROJECT THE CONTRACTOR MUST:

1) NOTIFY THE GAS COMPANY OF THE PROPOSED LOCATION OF EXCAVATION.

2) TAKE PRECAUTION TO AVOID DAMAGE TO GAS COMPANY INSTALLATIONS.

SEE PROVINCIAL REGULATION 210/72 FOR DETAILS

LOCATION APPROVED
UNDERGROUND STRUCTURES

SUPV. U/G STRUCTURES COMMITTEE — DATE

NOTE:

LOCATION OF UNDERGROUND STRUCTURES AS SHOWN ARE BASED ON THE BEST INFORMATION AVAILABLE BUT NO GUARANTEE IS GIVEN THAT ALL EXISTING UTILITIES ARE SHOWN OR THAT THE GIVEN LOCATIONS ARE EXACT. CONFIRMATION OF EXISTENCE AND EXACT LOCATION OF ALL SERVICES MUST BE OBTAINED FROM THE INDIVIDUAL UTILITIES BEFORE PROCEEDING WITH CONSTRUCTION.

B.M.
ELEV.

CONSTRUCTION COMPLETION DATE: YYYY MM DD

| NO. | REVISIONS | DATE | BY |
|---|---|---|---|
| 00 | ISSUED FOR TENDER | 2025/03/31 | MS |

AECOM

| | | | |
|---|---|---|---|
| DESIGNED BY | MS | CHECKED BY | KO |
| DRAWN BY | TW | APPROVED BY | |
| SCALE: HORIZONTAL | N.T.S. | RELEASED FOR CONSTRUCTION | |
| VERTICAL | – | | |
| DATE | 2025 04 01 | DATE | |

PLOT DATE: 2025 04 01

ENGINEER'S SEAL
PROVINCE OF MANITOBA
M. SASIC
Member
46571
REGISTERED PROFESSIONAL ENGINEER
2025-04-01 Rev. 00

CONSULTANT DRAWING NUMBER
E–1002

Winnipeg

THE CITY OF WINNIPEG
WATER AND WASTE DEPARTMENT
SOLID WASTE SERVICES

BRADY ROAD RESOURCE MANAGEMENT FACILITY
CELL 35
ELECTRICAL SINGLE LINE

SHEET 20 OF 27

CITY DRAWING NUMBER
1–0400L–E0002–001

FILE PATH: C:\Users\pedersenj\DC\ACCDocs\AECOM\EN-AMER(CAN)-60733855-COW Brady Dump\Project Files\900 Design Collaboration\910 CAD\20-SHT
FILE NAME: 1–0400L–E0002–001.dwg