SHEET: COW-A1 (05/2005)

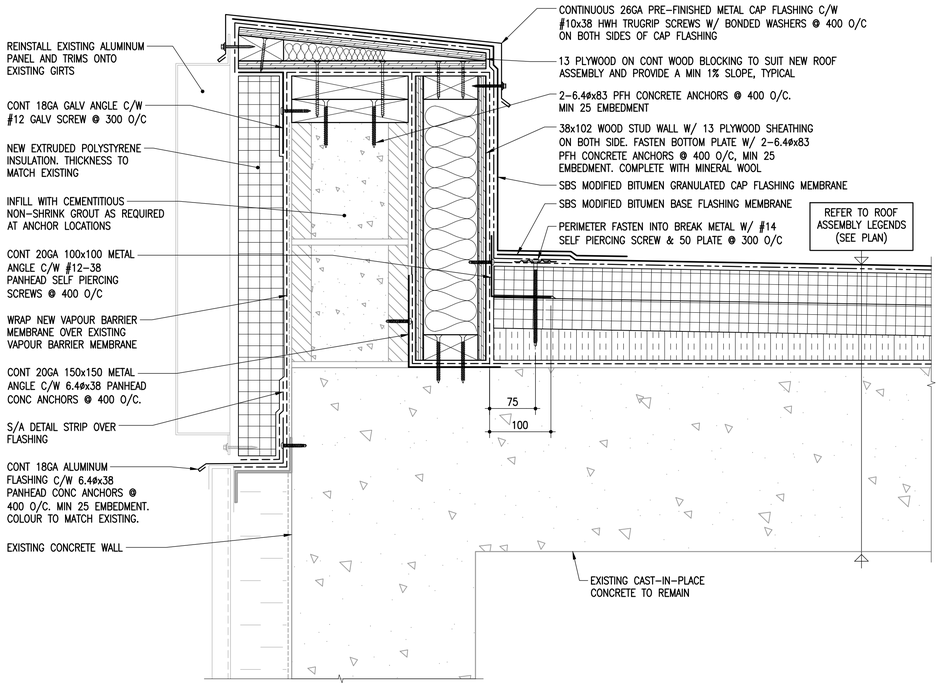

1 ROOF DETAIL AT CAST-IN-PLACE CONCRETE

1-0601B-B0076-002 1:5

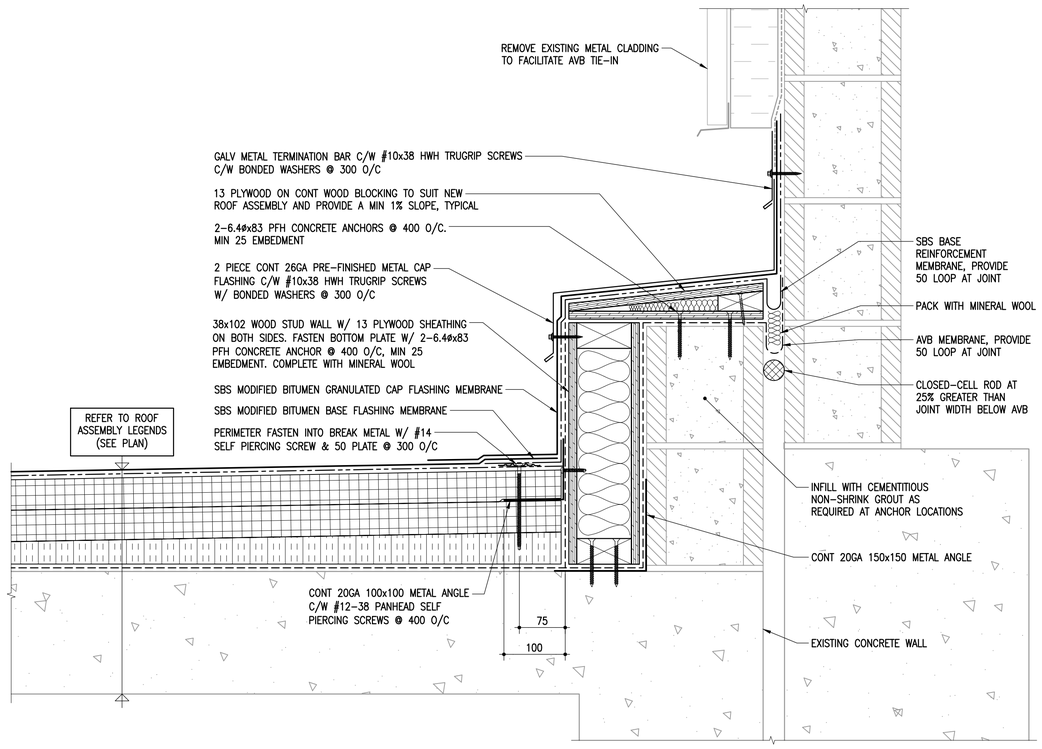

2 ROOF DETAIL AT HIGH WALL

1-0601B-B0076-002 1:5

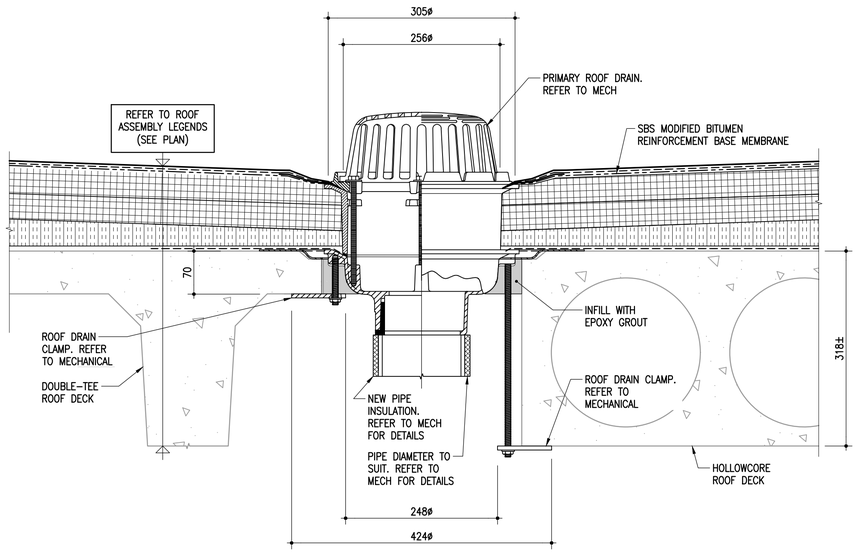

3 PRIMARY ROOF DRAIN DETAIL

1-0601B-B0076-002 1:5

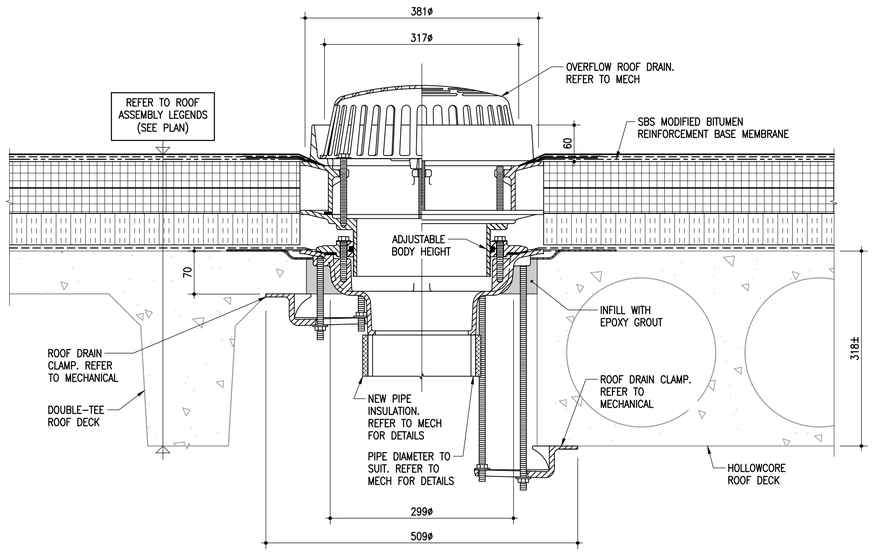

4 OVERFLOW ROOF DRAIN DETAIL

1-0601B-B0076-002 1:5

NO.	DRAWING NUMBER	REFERENCE DRAWING TITLE
10		
9		
8		
7		
6	1-0601B-M0019-001	MECHANICAL MISCELLANEOUS PLUMBING AND VENTING DETAILS
5	1-0601B-B0071-001	BUILDING WI & WM ROOF PLAN
4	1-0601B-B0070-001	BUILDING WA ROOF PLAN
3	1-0601B-B0069-001	BUILDING WP ROOF PLAN
2	1-0601B-B0068-001	BUILDING WF, WR, WO & WC ROOF PLAN
1	1-0601B-G0004-001	BUILDING NOTES, SCHEDULE & LEGENDS

REFERENCE DRAWINGS

ENGINEERS GEOSCIENTISTS MANITOBA
Certificate of Authorization
Crosier Kilgour & Partners Ltd.
No. 235

B.M.
ELEV.

NO.	REVISIONS	DATE	BY
00	ISSUED FOR TENDER	23/03/21	GJH

300-275 Carlton Street
Winnipeg, Manitoba R3C 5R6
T 204. 943. 7501
F 204. 943. 7507
2022-1008
Crosier Kilgour & Partners Ltd.
CONSULTING STRUCTURAL ENGINEERS

DESIGNED BY	GJH	CHECKED BY	JAW
DRAWN BY	LOL	APPROVED BY	GJH
SCALE:	1:5	RELEASED FOR CONSTRUCTION BY:	
DATE	2023/03/21	DATE	

ENGINEER'S SEAL
PROVINCE OF MANITOBA
J.A. WELLS
23/03/21
REGISTERED PROFESSIONAL ENGINEER

CONSULTANT DRAWING NO.
S4.2

Winnipeg
THE CITY OF WINNIPEG
WATER AND WASTE DEPARTMENT
ENGINEERING DIVISION

DRINKING WATER TREATMENT PLANT
MAIN BUILDING
ROOF REPLACEMENT

CITY FILE NUMBER
W-1049

SHEET 2 OF 9

BUILDING
ROOF
DETAILS 2 OF 9

CITY DRAWING NUMBER
1-0601B-B0076-002

Last Save: 2023-03-21 11:02 AM

C:\USERS\LL\CROSIER KILGOUR & PARTNERS LTD\2022-1008 - WTP - ROOF REPLACEMENT - GENERAL\06 DRAWINGS\2022-1008_S0.1_S5.1_WTP-ROOFS.DWG