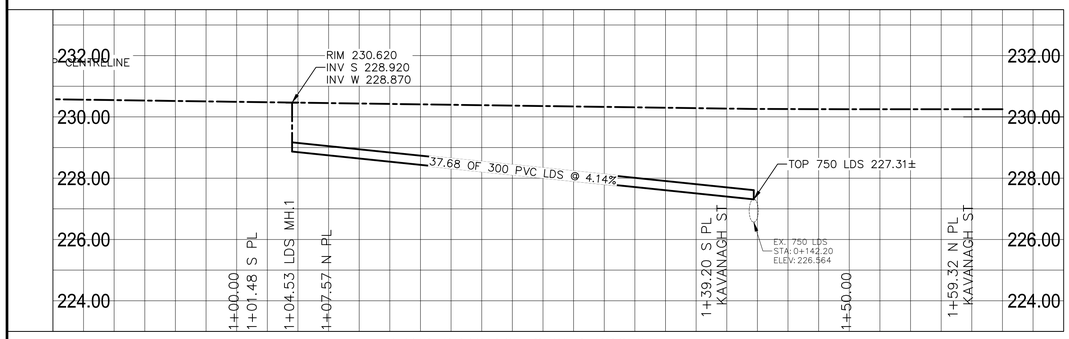

LAND DRAINAGE SEWER PROFILE

SCALE: 1:250 HOR
1:100 VER

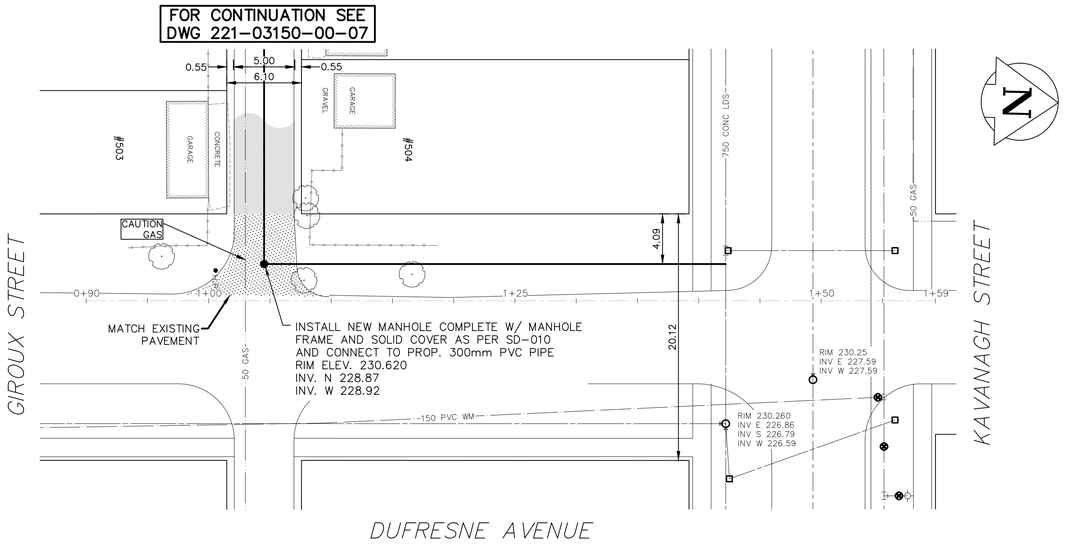

NOTES:

1. ALL WORK AND MATERIALS TO BE IN ACCORDANCE WITH THE LATEST REVISION OF THE CITY OF WINNIPEG STANDARD CONSTRUCTION SPECIFICATIONS.
2. CONTRACTOR TO CONFIRM THE LOCATION OF ALL UTILITIES/SERVICES IN THE FIELD PRIOR TO CONSTRUCTION.
3. ALL ROADWAY DIMENSIONS SHOWN ARE TO BACK OF CURB.
4. EXISTING ASPHALT TO BE PLANED AS SHOWN OR AS DIRECTED BY CONTRACT ADMINISTRATOR.
5. 150mm CONCRETE APRON, TEE AND MAIN APPROACHES AS DIRECTED BY CONTRACT ADMINISTRATOR.
6. EXISTING SIDEWALK TO BE RENEWED AS PER SD-228A AND AS DIRECTED BY CONTRACT ADMINISTRATOR.
7. PLANE/REMOVE EXISTING CURB AS DIRECTED BY CONTRACT ADMINISTRATOR.
8. ALL PRIVATE WALKWAYS TO BE ADJUSTED TO NEW SIDEWALK OR TOP OF CURB ELEVATION, AS DIRECTED BY THE CONTRACT ADMINISTRATOR.
9. PAVEMENT REPAIR FABRIC TO BE INSTALLED AS DIRECTED BY CONTRACT ADMINISTRATOR.
10. ALL EXISTING PRIVATE APPROACHES TO BE RENEWED AS DIRECTED BY CONTRACT ADMINISTRATOR.
11. INSTALLATION OF MOUNTABLE LIP CURBS AND THEIR LIMITS THROUGH PRIVATE APPROACHES TO BE DETERMINED BY CONTRACT ADMINISTRATOR.
12. MODIFIED BARRIER CURB TO BE CONSTRUCTED AT ALL INTERSECTION RADII AND ALLEY RADII
13. CONTRACTORS TO TAKE PRECAUTIONARY STEPS TO PROTECT EXISTING TREES WITHIN THE LIMITS OF CONSTRUCTION FROM DAMAGE FROM CONSTRUCTION ACTIVITIES AS OUTLINED IN THE SPECIFICATIONS.
14. LAMP STANDARDS, HYDRO POLES, AND ANCHORS THAT REQUIRE TEMPORARY SUPPORT, REMOVAL OR REPLACEMENT, TO BE DONE SO AT THE EXPENSE OF THE CONTRACTOR AS NECESSARY.
15. WHERE UNSTABLE SUB GRADE ARE ENCOUNTERED, ADDITIONAL EXCAVATION AND PLACEMENT OF SUBBASE AS DIRECTED BY CONTRACT ADMINISTRATOR.
16. ADJUSTMENTS TO PROPOSED CROSSFALL, WHERE REQUIRED, ARE TO BE DETERMINED BY CONTRACT ADMINISTRATOR TO SUIT EXISTING DRIVEWAYS, APPROACHES, GARAGE PADS AND YARDS.
17. ALL BOULEVARDS TO BE SODDED UNLESS OTHERWISE NOTED.
18. ADJUST ALL WATER VALVES, HYDRANTS, MANHOLES, AND CATCH BASINS IN WORK AREA TO GRADE.
19. REMOVE, ADJUST AND SUPPLY PRECAST SIDEWALK BLOCKS AS DIRECTED BY CONTRACT ADMINISTRATOR.

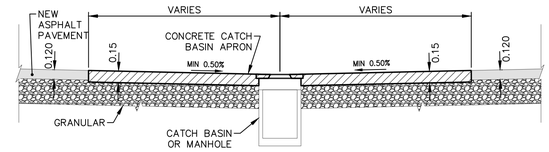

TYPICAL TEE CATCHBASIN APRON DETAIL

NTS

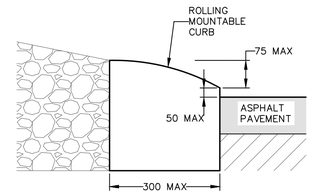

TYPICAL MOUNTABLE LIP CURB DETAIL

NTS

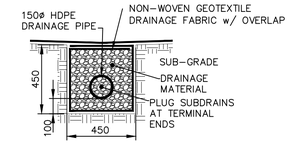

REFERENCE SPECIFICATIONS

1. SUB-GRADE, SUB-BASE AND BASE MATERIAL SHALL BE SUPPLIED AND PLACED IN ACCORDANCE WITH CW-3110
2. INSTALLATION OF SUBDRAINS SHALL BE IN ACCORDANCE WITH CW-3120
3. DRAINAGE GEOTEXTILE FABRIC AND DRAINAGE PIPE SHALL CONFORM TO "APPROVED PRODUCTS FOR SURFACE WORKS"

TYPICAL ALLEY SUBDRAIN DETAIL

NTS

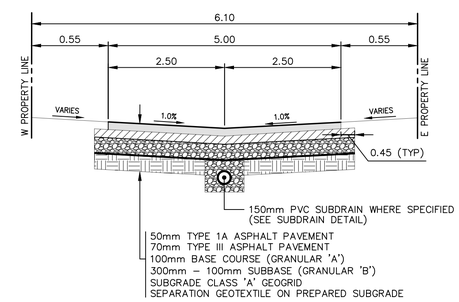

TYPICAL CROSS-SECTION

NTS

EXISTING	LEGEND-PLAN	PROPOSED	EXISTING	LEGEND-PLAN	PROPOSED	EXISTING	LEGEND-PROFILE	PROPOSED
	WATER MAIN			IRON BAR				
	LAND DRAINAGE SEWER			HYDRO POLE & LIGHT STANDARD				
	WASTE WATER SEWER			LIGHT STANDARD OR TRAFFIC SIGNAL				
	HYDRO		HP	HYDRO POLE				
	BELL/MTS			CURB RAMP				
	GAS			DETECTABLE WARNING SURFACE TILE				
	SIGNALS			EDGE OF SIDEWALK				
	MANHOLE			FENCE				
	CATCH BASIN			PROPERTY LINE				
	CURB INLET			EDGE OF ASPHALT				
	UTILITIES ADJUSTED			EDGE OF CONCRETE				
	PLUG			MODIFIED BARRIER CURB				
	HYDRANT			BARRIER CURB				
	VALVE			BARRIER CURB AND GUTTER				
	CURB STOP			CONC SIDEWALK			NORTH OR WEST SIDEWALK	
230.99	GROUND GRADE			CONCRETE SLAB			SOUTH OR EAST SIDEWALK	
(231.00)	PAVEMENT GRADE	(231.000)		ASPHALT			ROADWAY CENTRELINE	
	ANCHOR			MILLED SURFACE			NORTH OR WEST GUTTER	
#111	CIVIC ADDRESS			PAVEMENT REPAIR FABRIC			SOUTH OR EAST GUTTER	

NOTE: CHAINAGES SHOWN ARE ALONG ℄ OF RIGHT-OF-WAY

LOCATIONS APPROVED UNDERGROUND STRUCTURES

SIGNED BY:

SUPV UG STRUCTURES DATE

LOCATION OF UNDERGROUND STRUCTURES AS SHOWN ARE BASED ON THE BEST INFORMATION AVAILABLE BUT NO GUARANTEE IS GIVEN THAT ALL EXISTING UTILITIES ARE SHOWN OR THAT THE GIVEN LOCATIONS ARE EXACT CONFIRMATION OF EXISTANCE AND EXACT LOCATION OF ALL SERVICES MUST BE OBTAINED FROM THE INDIVIDUAL UTILITIES BEFORE PROCEEDING

G.B.M. ----
ELEV. ----

NO.	REVISIONS	DATE	BY
H			
G			
F			
E			
D	----	----	----
C	----	----	----
B	ISSUED FOR TENDER	21/07/22	AB
A	DETAILED DESIGN REVIEW	19/07/22	AB

METRIC
WHOLE NUMBERS INDICATE MILLIMETRES
DECIMALIZED NUMBERS INDICATE METRES

FOR TENDER PURPOSES ONLY

NOT FOR CONSTRUCTION

ENGINEERS GEOSCIENTISTS MANITOBA
Certificate of Authorization
WSP Canada Inc.
No. 5750

wsp

WSP Canada Inc.
1600 Buffalo Place
Winnipeg, MB R3T 6B8
t. 204.477.6650
f. 204-474.2864
www.wsp.com

DESIGNED BY	AB	CHECKED BY	KG
DRAWN BY	AB	APPROVED BY	SM
HOR. SCALE	1:250	RELEASED FOR CONSTRUCTION	
VERTICAL	1:10		
DATE	JULY 2022	DATE	

ENGINEER'S SEAL

PROVINCE OF MANITOBA
S. C. MINTY
Member
2073
REGISTERED PROFESSIONAL ENGINEER

2022-07-26

CONSULTANT ACAD DWG. NO.
221-03150-00-09

Winnipeg

THE CITY OF WINNIPEG

PUBLIC WORKS DEPARTMENT
ENGINEERING SERVICES DIVISION

2022 TBO & LOCAL IMPROVEMENTS

DUFRESNE LDS KAVANAGH ST/GIROUX ST ALLEY

ASPHALT ALLEY RECONSTRUCTION
STA. 1+04.50 (MH) TO STA. 1+42.20 (TIE-IN)

CITY DRAWING NUMBER ---09

SHEET 09 OF 12

TENDER NO. 541-2022

Jul 21, 2022 - 6:30pm
P:\2022\221-03150-00 - 2022 TBO & LI\14.0 Tech + Prof Services\14.11 Highways_Bridges\14.11.06_Dwg\03_Work_Dwg\221-03150-00_Kavanagh St_Giroux St_Plan_Profile.dwg -tab:541-2022_Drawing_221-03150-00-09-RB