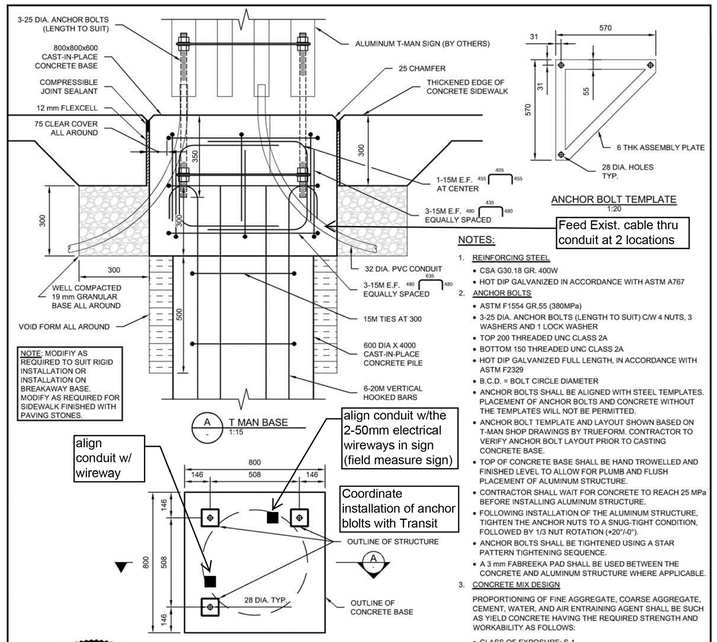

NOTES:

1. REINFORCING STEEL
   - CSA G30.18 GR. 400W
   - HOT DIP GALVANIZED IN ACCORDANCE WITH ASTM A767
2. ANCHOR BOLTS
   - ASTM F1554 GR.55 (380MPa)
   - 3-25 DIA. ANCHOR BOLTS (LENGTH TO SUIT) C/W 4 NUTS, 3 WASHERS AND 1 LOCK WASHER
   - TOP 200 THREADED UNC CLASS 2A
   - BOTTOM 150 THREADED UNC CLASS 2A
   - HOT DIP GALVANIZED FULL LENGTH, IN ACCORDANCE WITH ASTM F2329
   - B.C.D. = BOLT CIRCLE DIAMETER
   - ANCHOR BOLTS SHALL BE ALIGNED WITH STEEL TEMPLATES. PLACEMENT OF ANCHOR BOLTS AND CONCRETE WITHOUT THE TEMPLATES WILL NOT BE PERMITTED.
   - ANCHOR BOLT TEMPLATE AND LAYOUT SHOWN BASED ON T-MAN SHOP DRAWINGS BY TRUEFORM. CONTRACTOR TO VERIFY ANCHOR BOLT LAYOUT PRIOR TO CASTING CONCRETE BASE.
   - TOP OF CONCRETE BASE SHALL BE HAND TROWELLED AND FINISHED LEVEL TO ALLOW FOR PLUMB AND FLUSH PLACEMENT OF ALUMINUM STRUCTURE.
   - CONTRACTOR SHALL WAIT FOR CONCRETE TO REACH 25 MPa BEFORE INSTALLING ALUMINUM STRUCTURE.
   - FOLLOWING INSTALLATION OF THE ALUMINUM STRUCTURE, TIGHTEN THE ANCHOR NUTS TO A SNUG-TIGHT CONDITION, FOLLOWED BY 1/3 NUT ROTATION (+20°/-0°).
   - ANCHOR BOLTS SHALL BE TIGHTENED USING A STAR PATTERN TIGHTENING SEQUENCE.
   - A 3 mm FABREEKA PAD SHALL BE USED BETWEEN THE CONCRETE AND ALUMINUM STRUCTURE WHERE APPLICABLE.
3. CONCRETE MIX DESIGN

PROPORTIONING OF FINE AGGREGATE, COARSE AGGREGATE, CEMENT, WATER, AND AIR ENTRAINING AGENT SHALL BE SUCH AS YIELD CONCRETE HAVING THE REQUIRED STRENGTH AND WORKABILITY AS FOLLOWS:

- CLASS OF EXPOSURE: S-1
- MINIMUM COMPRESSIVE STRENGTH AT 56 DAYS = 35MPa
- MAXIMUM WATER/CEMENT RATIO = 0.40
- AIR CONTENT: CATEGORY 2 PER TABLE 4 OF CSA A23.1 (4-7%)
- CEMENT IN ACCORDANCE WITH CSA A23.1

METRIC

WHOLE NUMBERS INDICATE MILLIMETRES
DECIMALIZED NUMBERS INDICATE METRES

WARNING

IF POWER EQUIPMENT IS TO BE USED FOR EXCAVATION THE CONTRACTOR MUST:

- NOTIFY THE GAS COMPANY OF THE PROPOSED LOCATION OF EXCAVATION.
- TAKE PRECAUTION TO AVOID DAMAGE TO GAS COMPANY INSTALLATIONS SEE PROVINCIAL REGULATION 210/72 FOR DETAILS.
- OBTAIN EXCAVATION PERMITS PRIOR TO CONSTRUCTION.

PROVINCE OF MANITOBA — ORIGINAL STAMPED BY D.R.C. AMORIM 09/25/2017 Member 33215 — REGISTERED PROFESSIONAL ENGINEER

APEGM Certificate of Authorization
Dillon Consulting Limited (MB)
No. 1789 Date: 09/25/2017

THE CITY OF WINNIPEG
WINNIPEG TRANSIT DEPARTMENT

CONCRETE FOUNDATION DETAILS FOR T-MAN

NO.	DATE	DESCRIPTION	BY
1	09/25/2017	DESIGNED BY DILLON CONSULTING	DRA

DESIGNED BY: MS | CHECKED BY: DRA | SCALE: AS NOTED
DRAWN BY: KNL | DATE: 09/25/2017 | REVISION: 00

1 / L23 T-MAN FOUNDATION
SCALE : NTS

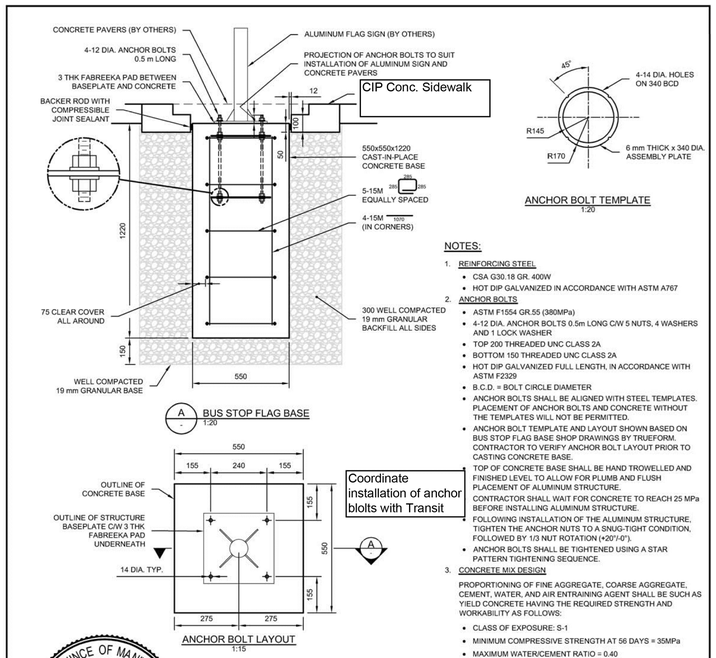

NOTES:

1. REINFORCING STEEL
   - CSA G30.18 GR. 400W
   - HOT DIP GALVANIZED IN ACCORDANCE WITH ASTM A767
2. ANCHOR BOLTS
   - ASTM F1554 GR.55 (380MPa)
   - 4-12 DIA. ANCHOR BOLTS 0.5m LONG C/W 5 NUTS, 4 WASHERS AND 1 LOCK WASHER
   - TOP 200 THREADED UNC CLASS 2A
   - BOTTOM 150 THREADED UNC CLASS 2A
   - HOT DIP GALVANIZED FULL LENGTH, IN ACCORDANCE WITH ASTM F2329
   - B.C.D. = BOLT CIRCLE DIAMETER
   - ANCHOR BOLTS SHALL BE ALIGNED WITH STEEL TEMPLATES. PLACEMENT OF ANCHOR BOLTS AND CONCRETE WITHOUT THE TEMPLATES WILL NOT BE PERMITTED.
   - ANCHOR BOLT TEMPLATE AND LAYOUT SHOWN BASED ON BUS STOP FLAG BASE SHOP DRAWINGS BY TRUEFORM. CONTRACTOR TO VERIFY ANCHOR BOLT LAYOUT PRIOR TO CASTING CONCRETE BASE.
   - TOP OF CONCRETE BASE SHALL BE HAND TROWELLED AND FINISHED LEVEL TO ALLOW FOR PLUMB AND FLUSH PLACEMENT OF ALUMINUM STRUCTURE.
   - CONTRACTOR SHALL WAIT FOR CONCRETE TO REACH 25 MPa BEFORE INSTALLING ALUMINUM STRUCTURE.
   - FOLLOWING INSTALLATION OF THE ALUMINUM STRUCTURE, TIGHTEN THE ANCHOR NUTS TO A SNUG-TIGHT CONDITION, FOLLOWED BY 1/3 NUT ROTATION (+20°/-0°).
   - ANCHOR BOLTS SHALL BE TIGHTENED USING A STAR PATTERN TIGHTENING SEQUENCE.
3. CONCRETE MIX DESIGN

PROPORTIONING OF FINE AGGREGATE, COARSE AGGREGATE, CEMENT, WATER, AND AIR ENTRAINING AGENT SHALL BE SUCH AS YIELD CONCRETE HAVING THE REQUIRED STRENGTH AND WORKABILITY AS FOLLOWS:

- CLASS OF EXPOSURE: S-1
- MINIMUM COMPRESSIVE STRENGTH AT 56 DAYS = 35MPa
- MAXIMUM WATER/CEMENT RATIO = 0.40
- AIR CONTENT: CATEGORY 2 PER TABLE 4 OF CSA A23.1 (4-7%)
- CEMENT IN ACCORDANCE WITH CSA A23.1

METRIC

WHOLE NUMBERS INDICATE MILLIMETRES
DECIMALIZED NUMBERS INDICATE METRES

WARNING

IF POWER EQUIPMENT IS TO BE USED FOR EXCAVATION THE CONTRACTOR MUST:

- NOTIFY THE GAS COMPANY OF THE PROPOSED LOCATION OF EXCAVATION.
- TAKE PRECAUTION TO AVOID DAMAGE TO GAS COMPANY INSTALLATIONS SEE PROVINCIAL REGULATION 210/72 FOR DETAILS.
- OBTAIN EXCAVATION PERMITS PRIOR TO CONSTRUCTION.

PROVINCE OF MANITOBA — ORIGINAL STAMPED BY D.R.C. AMORIM 09/25/2017 Member 33215 — REGISTERED PROFESSIONAL ENGINEER

APEGM Certificate of Authorization
Dillon Consulting Limited (MB)
No. 1789 Date: 09/25/2017

THE CITY OF WINNIPEG
WINNIPEG TRANSIT DEPARTMENT

CONCRETE FOUNDATION DETAILS FOR BUS STOP FLAG

NO.	DATE	DESCRIPTION	BY
1	09/25/2017	DESIGNED BY DILLON CONSULTING	DRA

DESIGNED BY: MS | CHECKED BY: DRA | SCALE: AS NOTED
DRAWN BY: KNL | DATE: 09/25/2017 | REVISION: 00

2 / L23 BUS STOP FLAG FOUNDATION
SCALE : NTS

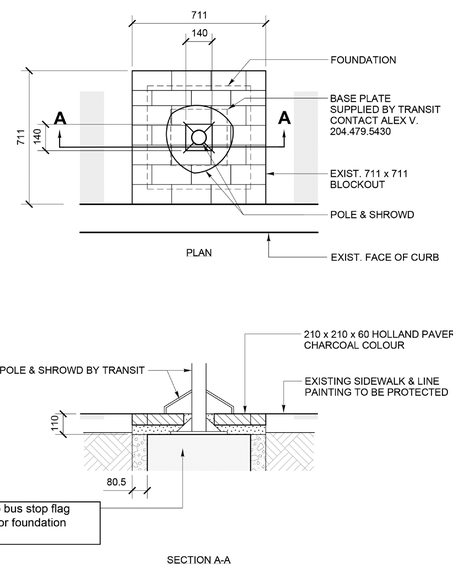

3 / L23 BUS STOP FLAG PAVER LAYOUT
SCALE : NTS

FOR TENDER PURPOSES ONLY

NOT FOR CONSTRUCTION

NOTE:
These design documents are prepared solely for the use by the party with whom the design professional has entered into a contract and there are no representations of any kind made by the design professional to any party with whom the design professional has not entered into a contract.

LOCATIONS APPROVED UNDERGROUND STRUCTURES

SIGNED BY: _____ SUPV U/G STRUCTURES DATE

LOCATION OF UNDERGROUND STRUCTURES AS SHOWN ARE BASED ON THE BEST INFORMATION AVAILABLE BUT NO GUARANTEE IS GIVEN THAT ALL EXISTING UTILITIES ARE SHOWN OR THAT THE GIVEN LOCATIONS ARE EXACT CONFIRMATION OF EXISTANCE AND EXACT LOCATION OF ALL SERVICES MUST BE OBTAINED FROM THE INDIVIDUAL UTILITIES BEFORE PROCEEDING

G.B.M.
ELEV.

NO.	REVISIONS	DATE	BY
A	ISSUED FOR TENDER	09-02-2022	JH

HTFC PLANNING & DESIGN
1600-115 Bannatyne Avenue East Winnipeg, MB R3B 0R3 Canada
PHONE 204-944-9907 WEB htfc.mb.ca

DESIGNED BY	JH	CHECKED BY	JH
DRAWN BY	SW	APPROVED BY	GM
HOR. SCALE	AS NOTED	RELEASED FOR CONSTRUCTION	
VERTICAL	AS NOTED		
DATE	09-02-2022	DATE	-

ENGINEER'S SEAL: Glen Manning Member No. 87 Feb. 9, 2022

CONSULTANT ACAD DWG. NO. L2.3

THE CITY OF WINNIPEG
PUBLIC WORKS DEPARTMENT
ENGINEERING SERVICES DIVISION

2021-2022 PIONEER, WILLIAM STEVENSON COLONY & ST. MARY RENEWALS PROJECT

T-MAN & TRANSIT STOP FLAG FOUNDATION DETAILS

CITY DRAWING NUMBER: P-3545-19
SHEET 19 OF 19
BID NO. 807-2021

Feb 24, 2022 – 1:31pm
P:\2021\21-092 Pioneer & William Stevenson Renewals\07 CAD\21-092 Details HTFC.dwg – tab:L2.3