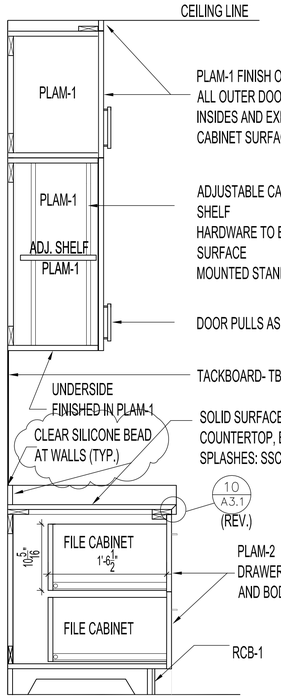

1 1 A3.1 GENERAL OFFICE 105 DESK
SCALE: 3/4"=1'-0"

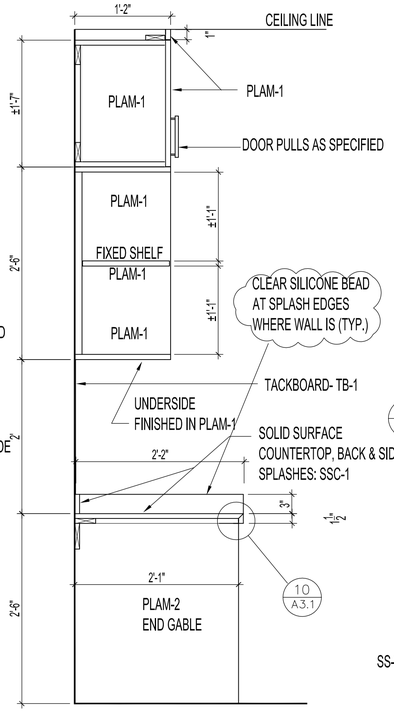

1 2 A3.1 GENERAL OFFICE 105 DESK
SCALE: 3/4"=1'-0"

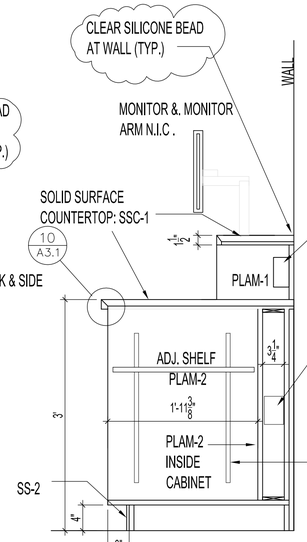

1 3 A3.1 WATCH DESK SECTION
SCALE: 3/4"=1'-0"

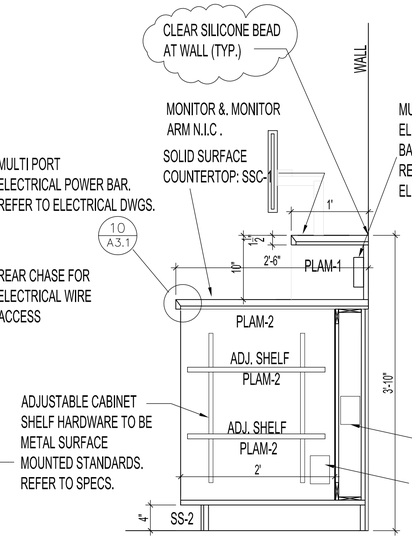

1 4 A3.1 WATCH DESK SECTION
SCALE: 3/4"=1'-0"

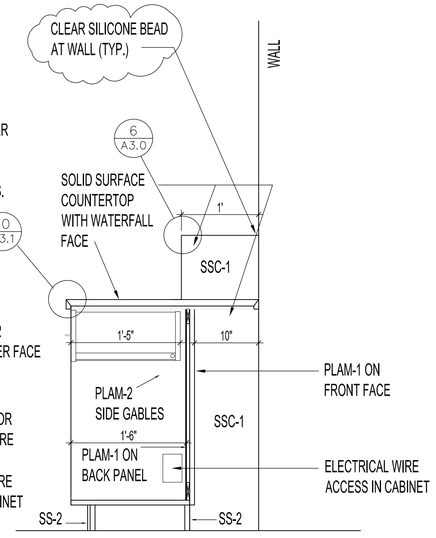

1 5 A3.1 WATCH DESK SECTION
SCALE: 3/4"=1'-0"

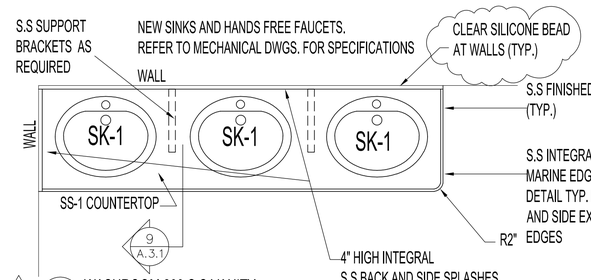

1 6 A3.1 WASHROOM 203 S.S VANITY
SCALE: 3/4"=1'-0"

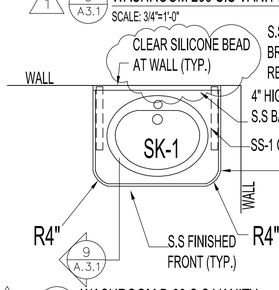

1 7 A3.1 WASHROOM B-03 S.S VANITY
SCALE: 3/4"=1'-0"

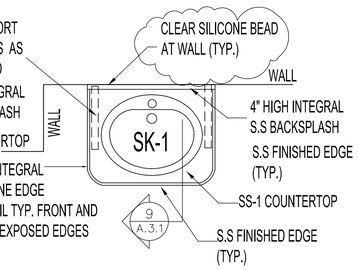

1 8 A3.1 WASHROOM 210 S.S VANITY
SCALE: 3/4"=1'-0"

STAINLESS STEEL SPECS:

- 16 GAUGE S.S TYPE 304 #4 POLISHED TOP AND INTEGRAL MARINE EDGE DETAIL ON SIDES AND FRONT.
- 4" HIGH BACK AND SIDE SPLASH TO BE COVED AND WELDED INTEGRAL INTO COUNTERTOP; WELDS CLEANED AND ALL EDGES POLISHED TO BLEND WITH S.S TOP. NO SHARP EDGES TO REMAIN.
- SUBMIT SHOP DRAWINGS FOR APPROVAL
- FRONT AND SIDE APRONS TO BE 16 GAUGE S.S TYPE # 304 #4 POLISHED TO MATCH TOP.
- NEW SK-1 SINKS TO BE DROP IN. REFER TO MECHANICAL SPECIFICATIONS.
- CONFIRM ALL SITE MEASUREMENTS, PLUMBING & SINK LOCATIONS PRIOR TO FABRICATION.
- CONTRACTOR TO PROVIDE BLOCKING IN WALL FOR S.S VANITIES FOR SUPPORT.
- ANY NECESSARY SUPPORT BRACKETS TO BE 18 GAUGE S.S TYPE # 304 #4 POLISHED. ALL EDGES TO BE SMOOTH; NO SHARP EDGES. FLAT BAR DESIGN, TO BE ANCHORED TO WALL AND ATTACHED TO S.S COUNTERTOP UNIT FOR SUPPORT. NOT TO BE VISIBLE.

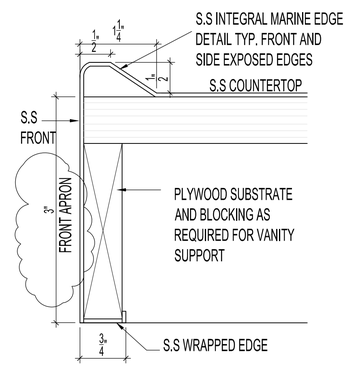

1 9 A3.1 TYP. S.S COUNTERTOP EDGE DETAIL
SCALE: N.T.S

SOLID SURFACE COUNTERTOP SSC-1 WITH WATERFALL EDGE. ALL EDGES MATTE POLISHED FINISH

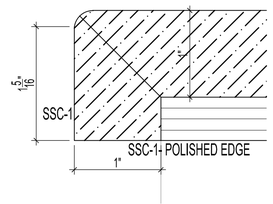

10 A3.1 TYPICAL SOLID SURFACE COUNTERTOP EDGE DETAIL
SCALE: N.T.S

MILLWORK HARDWARE SPECIFICATIONS:

DRAWER SLIDES:
MODEL: BLUM # 56H TANDEM FULL EXTENSION SLIDE WITH BLUM MOTION DEPTH TO MATCH CABINET SIZE;
INSTALL TYPE: SIDE MOUNT
FINISH: CHROME

DRAWER/ DOOR HANDLES:
MODEL: HAFELE # 117.05.630 VERANDA COLLECTION
SIZE: 224 mm (8 INCHES)
FINISH: STAINLESS STEEL #304

DOOR HINGES:
MODEL: HETTICK CONCEALED HINGE PRODUCT # 790
FINISH: NICKEL FINISH
110 DEGREE SWING.

DRAWER/ DOOR LOCKS: (AS REQUIRED)
HAFELE CYLINDER MODULE
MODEL: 235.08.358

1 SHELF SUPPORTS: (TO SUIT CABINET)
HAFELE 255 SERIES PILASTER STANDARDS; KV; 5/8" X 3/16" 23 GA
MODEL: 255 AL 18

- REFER TO N.M.S SECTION 06 02 00 ROUGH CARPENTRY AND 06 04 00 ARCHITECTURAL WOODWORK IN TENDER DOCUMENT FOR STANDARD OF CONSTRUCTION FOR ALL MILLWORK.
- SHOP DRAWINGS TO BE SUBMITTED TO CONTRACT ADMINISTRATOR FOR APPROVAL PRIOR TO CONSTRUCTION.
- SITE MEASUREMENTS REQUIRED PRIOR TO CONSTRUCTION.

1
- CONFIRM ALL GROMMET LOCATIONS PRIOR TO CUTTING. GROMMET COLOR TO BE WHITE..

NOTES:

THESE DRAWINGS SHALL NOT BE SCALED. CONSULT WITH CONTRACT ADMINISTRATOR AND DESIGNER ON ANY CONCERNS.

SUBMISSION OF SITE MARK-UPS, AS-BUILTS, OPERATING & MAINTENANCE MANUALS AND OTHER SUPPORTING DOCUMENTS TO CLIENT ARE MANDATORY AT THE COMPLETION OF THIS PROJECT.

THE CONTRACTOR SHALL VISIT THE SITE AND SATISFY ONESELF ALL DIMENSIONS, DATUM, AND DETAILED INFORMATION SHOWN ARE CORRECT.

THE CONTRACTOR IS TO REVIEW AND COORDINATE ALL ARCHITECTURAL, STRUCTURAL, MECHANICAL AND ELECTRICAL DRAWINGS FOR ADDITIONAL OPENINGS THROUGH FLOORS, WALLS, AND CEILINGS FOR DUCTS, PIPES & ELECTRICAL RISERS AND ALL OPENINGS NOT SHOWN ON DRAWINGS.

ALL OPENINGS THROUGH FIRE ASSEMBLIES INCLUDING FLOORS AND CEILINGS ARE TO BE FIRE STOPPED AND SEALED WITH ULC APPROVED FIRE STOPPING TO MAINTAIN THE INTEGRITY OF THE FIRE SEPARATION, AND PROVIDE A SMOKE-TIGHT BARRIER.

ALL PRODUCTS AND MATERIALS TO BE USED AND INSTALLED SHALL CONFORM WITH MANUFACTURER'S SPECIFICATIONS, APPLICABLE CODES AND AUTHORITY HAVING JURISDICTION.

THE CONTRACTOR SHALL BE RESPONSIBLE TO PATCH AND MAKE GOOD ALL EXISTING CONSTRUCTION AFFECTED BY THE REMOVAL OF ALL ITEMS FORMING PART OF THE RENOVATION WORK.

WHERE NEW FLOORING AND BASE IS TO BE INSTALLED IN EXISTING AREAS (REFER TO FLOOR PLAN AND ROOM SCHEDULE) THE EXISTING FLOORING SURFACE AND BASE MUST BE REMOVED. UNLESS OTHERWISE NOTED. ALL FLOOR SURFACES SHALL BE PREPARED IN ACCORDANCE TO MANUFACTURER'S RECOMMENDATIONS FOR INSTALLATION OF NEW FLOOR.

WHERE PAINTING OF EXISTING WALLS IS INDICATED ON THE ROOM SCHEDULE, THESE WALLS MUST BE CLEANED OF ANY EXISTING WALL COVERING, PATCHED & PREPARED TO ACCEPT NEW MATERIAL, UNLESS OTHERWISE NOTED.

ALL NEW LIGHTING FIXTURES & NEW RECEPTACLES TO BE CONNECTED TO APPROPRIATE PANELS.

GENERAL DUTY RECEPTACLES SHALL BE WHITE & CSA APPROVED, C/W STAINLESS STEEL TRIM PLATES MOUNTED 18" ABOVE FINISHED FLOOR OR OTHERWISE NOTED.

THERMOSTATS, FIRE ALARM PULL STATIONS & OCCUPANCY LIGHT SWITCHES SHALL BE MOUNTED 47" ABOVE FINISHED FLOOR OR OTHERWISE NOTED.

ALL ABANDONED ELECTRICAL FIXTURES, COMPONENTS, RECEPTACLE & DATA WIRING SHALL BE REMOVED BACK TO SOURCE & TERMINATED AS PER APPLICABLE CODES. IF APPLICABLE, THIS INCLUDES WIRING CONTAINED IN HEADER DUCTS IN-FLOOR.

REFER TO CITY OF WINNIPEG, MATERIALS MANAGEMENT GENERAL TERMS & CONDITIONS FOR PROJECT: HTTP://WWW.WINNIPEG.CA/MATMGT/GEN_COND.STM

WARNING:
ASBESTOS KNOWN TO BE PRESENT IN SOME EXISTING DRYWALL AS INDICATED ON SITE. ABATEMENT BY CITY OF WINNIPEG CONTRACTOR TO PRECEDE START OF CONSTRUCTION. ASBESTOS MAY BE PRESENT IN OTHER AREAS. IF ASBESTOS OR ANY HAZARDOUS MATERIAL IS FOUND, STOP WORK IMMEDIATELY & CONTACT CITY OF WINNIPEG, CENTRAL CONTROL, PH: 204-986-2351.

No.	REVISION/DESCRIPTION	BY	DATE
1	ADDENDUM # 1		JULY 15 / 2020
0	ISSUED FOR CONSTRUCTION		JUNE 22 / 2020
00	ISSUED FOR CLIENT REVIEW		MAY 22 / 2020
000	ISSUED FOR CLIENT REVIEW		APRIL 17/ 2020

SEAL

DRAWN	CHECKED	DESIGNED	APPROVED
KJN	KJN	KJN	
DATE 2020.06.22	USER APPROVAL		

THE CITY OF WINNIPEG
PLANNING, PROPERTY AND DEVELOPMENT DEPARTMENT
MUNICIPAL ACCOMMODATIONS DIVISION
3-65 GARRY STREET, R3C 4K4

PROJECT
WINNIPEG FIRE PARAMEDIC SERVICES
FIRE STATION # 23
RENOVATIONS TO WASHROOMS AND SECOND FLOOR
880 DALHOUSIE DRIVE TENDER NO. 349-2020

SHEET TITLE
MILLWORK DETAILS

SCALE	PROJECT No:	SHEET No:
AS SHOWN	2019-147	A3.1R1

DRAWING SHEET SIZE: A1 (841mm x 594mm) PLOT 1:1

ADDRESS: 880 DALHOUSIE DRIVE | PROJECT No: 2019-147 | SHEET TITLE: MILLWORK DETAILS | DATE: 2020.06.22 | FILE NAME: 0880DL.dwg\A2