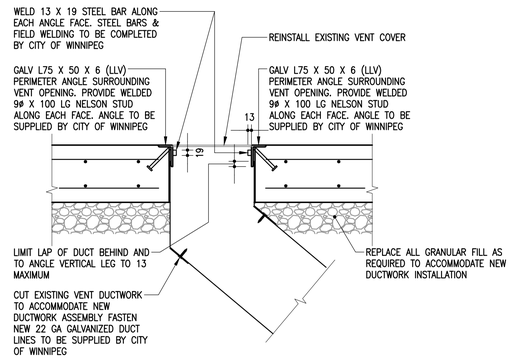

1 S2.3 S4.3 SECTION – VENT PENETRATION
1:10 (UNIT PRICE)

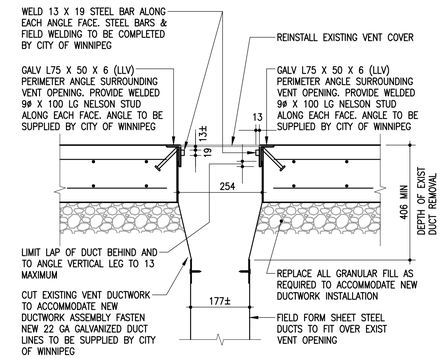

2 S2.3 S4.3 SECTION – VENT PENETRATION
1:10 (UNIT PRICE)

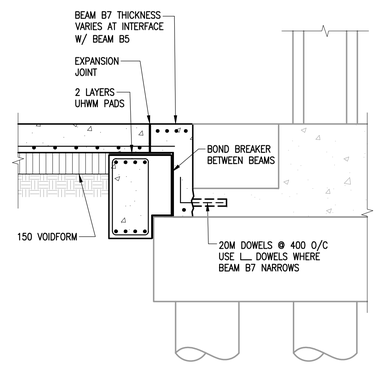

3 S2.3 S4.3 EXPANSION JOINT SECTION
1:20

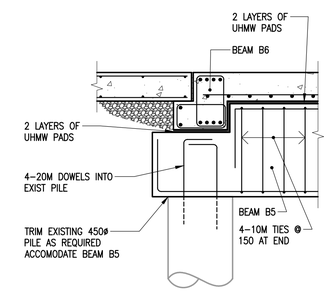

4 S2.3 S4.3 JOINT SECTION
1:20

The General Contractor shall check & verify all dimensions and report any errors or omissions to the designers.

No.	Date	Issue/Revision	By
0	2019-08-21	ISSUED FOR BID	IM

Consultant

300-275 Carlton Street
Winnipeg, Manitoba R3C 5R6
T 204. 943. 7501
F 204. 943. 7507

Crosier Kilgour & Partners Ltd.
CONSULTING STRUCTURAL ENGINEERS

Project
WINNIPEG TRANSIT GARAGE BUILDING
HOIST REPLACEMENT PROGRAM
421 OSBORNE STREET
WINNIPEG, MANITOBA

Sheet Title
NEW DETAILS

File	Date
2018-1170	2019-08-21
Design: IM	Drawn: JSR
Revision: 0	Sheet No.: S4.3