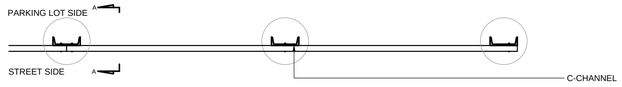

PLAN

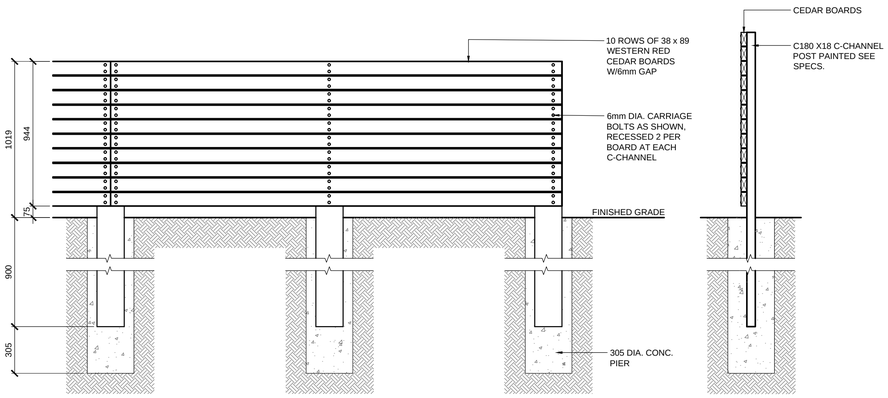

IN GROUND

SECTION A-A

1 / L3.2 PARKING SCREEN FENCE

SCALE 1:20

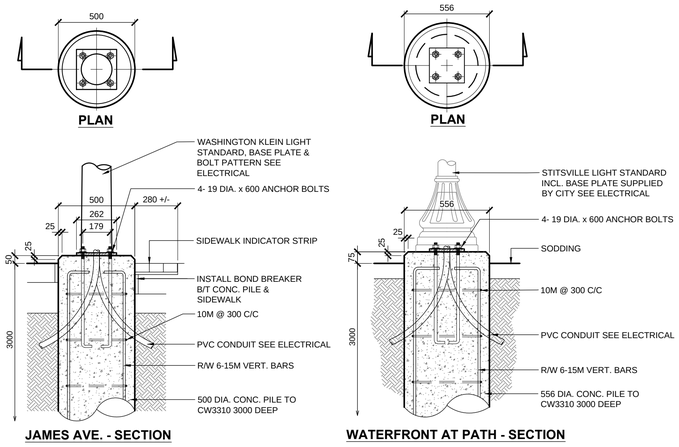

JAMES AVE. - SECTION

WATERFRONT AT PATH - SECTION

2 / L3.2 LIGHT STANDARD CONC. PILE

SCALE 1:20

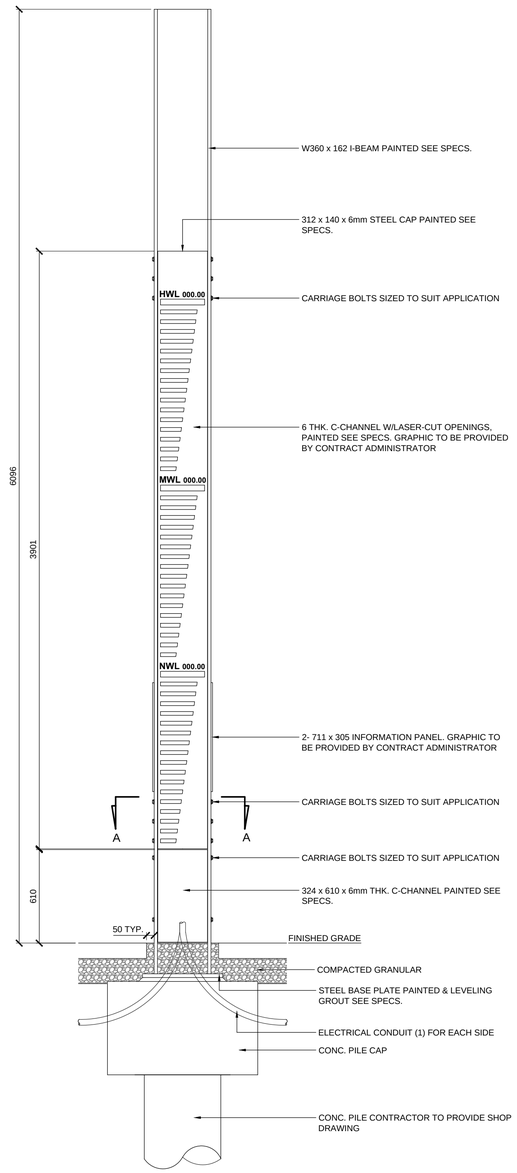

NORTH & SOUTH ELEVATION 1:20

3 / L3.2 WATER LEVEL INDICATOR

SCALE AS SHOWN

NOTES:

1. CONTRACTOR TO PROVIDE SHOP DRAWINGS FOR WATER LEVEL INDICATOR INCLUDING FOUNDATION AND STEEL COMPONENTS. SHOP DRAWINGS TO BE SEALED BY ENGINEER SEE SPECS.

2. FOUNDATION DESIGN BY CONTRACTOR. CONTRACTOR TO SUBMIT SHOP DRAWINGS SEALED BY ENGINEER.

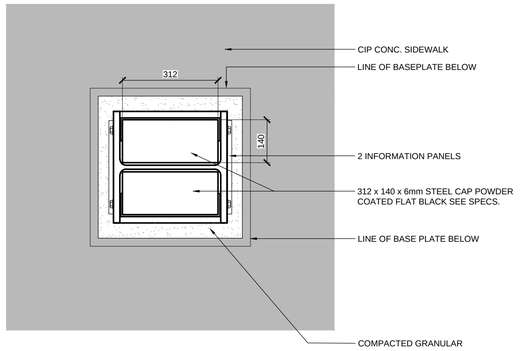

PLAN 1:10

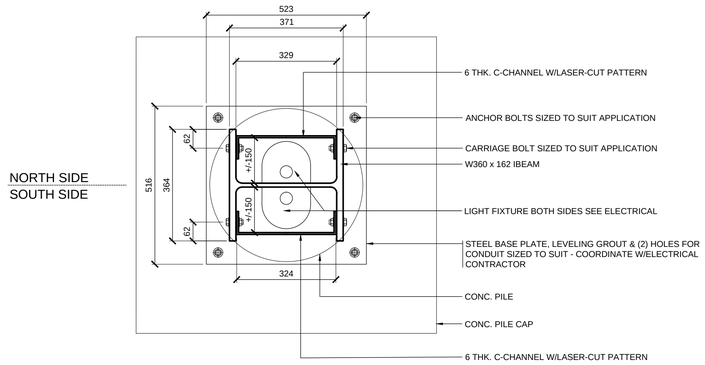

SECTION A-A 1:10

LOCATIONS APPROVED UNDERGROUND STRUCTURES

SIGNED BY: _____ _____

SUPV UG STRUCTURES DATE

LOCATION OF UNDERGROUND STRUCTURES AS SHOWN ARE BASED ON THE BEST INFORMATION AVAILABLE BUT NO GUARANTEE IS GIVEN THAT ALL EXISTING UTILITIES ARE SHOWN OR THAT THE GIVEN LOCATIONS ARE EXACT CONFIRMATION OF EXISTANCE AND EXACT LOCATION OF ALL SERVICES MUST BE OBTAINED FROM THE INDIVIDUAL UTILITIES BEFORE PROCEEDING

G.B.M.

ELEV.

NO.	REVISIONS	DATE	BY
1	ISSUED FOR TENDER	28/02/18	JH
1	ISSUED FOR UG REVIEW	11/01/18	JH

HTFC PLANNING & DESIGN
500-115 Bannatyne Avenue East Winnipeg, MB R3B 0R3
PHONE 204-943-9807 WEB htfc.mb.ca

DESIGNED BY	JH	CHECKED BY	GM
DRAWN BY	JH	APPROVED BY	GM
HOR. SCALE	AS NOTED	RELEASED FOR CONSTRUCTION	
VERTICAL	AS NOTED		
DATE	28/02/18	DATE	

ENGINEER'S SEAL

Manitoba Association of Architects and Professional Engineers
Jon Hanning
Member No. 61
Feb. 28, 2018

CONSULTANT ACAD DWG. NO. L3.2

Winnipeg

THE CITY OF WINNIPEG
PUBLIC WORKS DEPARTMENT
ENGINEERING SERVICES DIVISION

2018 NORTH EAST EXCHANGE DISTRICT STREET RENEWALS

WOOD, METAL & HARDSCAPE DETAILS

CITY DRAWING NUMBER

SHEET 13 OF 19

BID NO. 61-2018

NOTE:
These design documents are prepared solely for the use by the party with whom the design professional has entered into a contract and there are no representations of any kind made by the design professional to any party with whom the design professional has not entered into a contract.

Feb 28, 2018 - 7:54pm
\\prf\HTFC_FILE_SERVER\2017\17-074 NEE District Street Renewals\ACAD\17-074 Sections & Details.dwg -tab:3.2 D