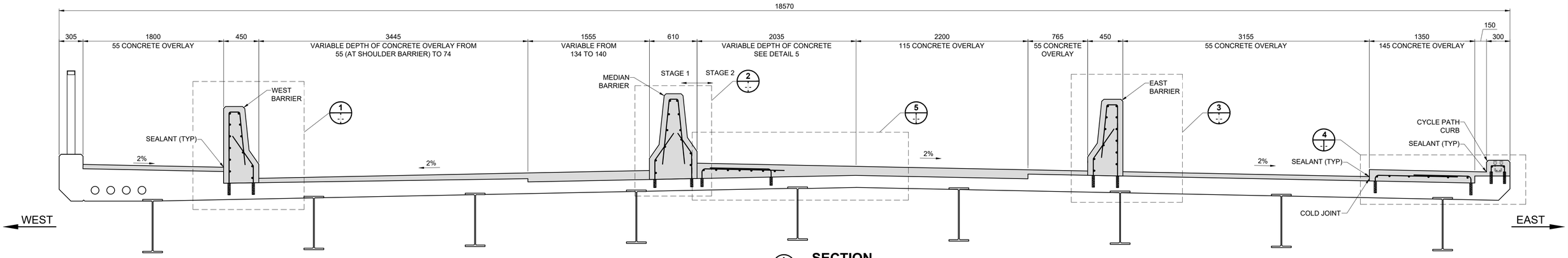

A SECTION
106 107
CONCRETE OVERLAY DEPTHS
SCALE: 1:25

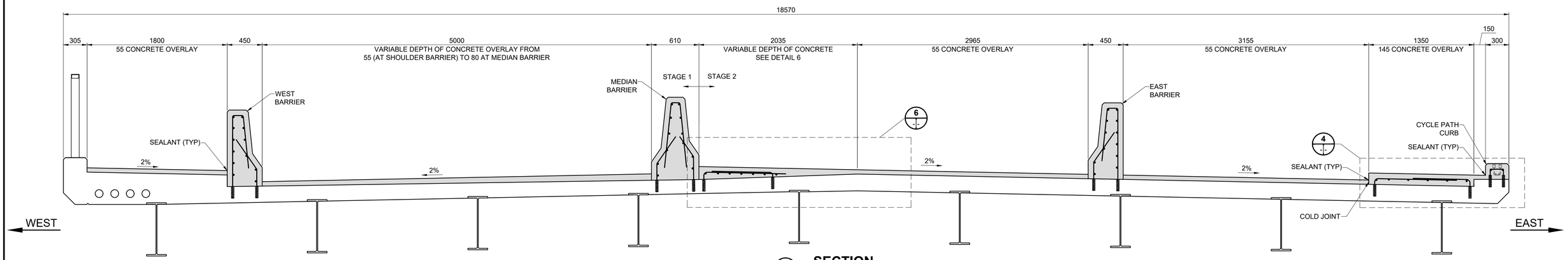

B SECTION
106 107
CONCRETE OVERLAY DEPTHS
SCALE: 1:25

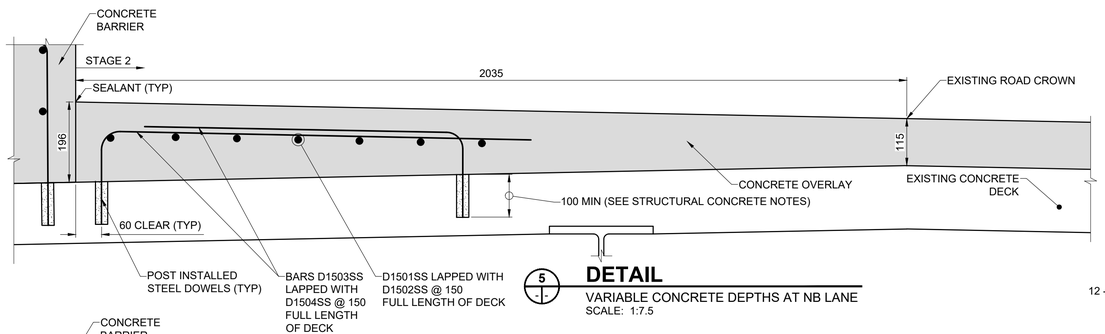

5 DETAIL
VARIABLE CONCRETE DEPTHS AT NB LANE
SCALE: 1:7.5

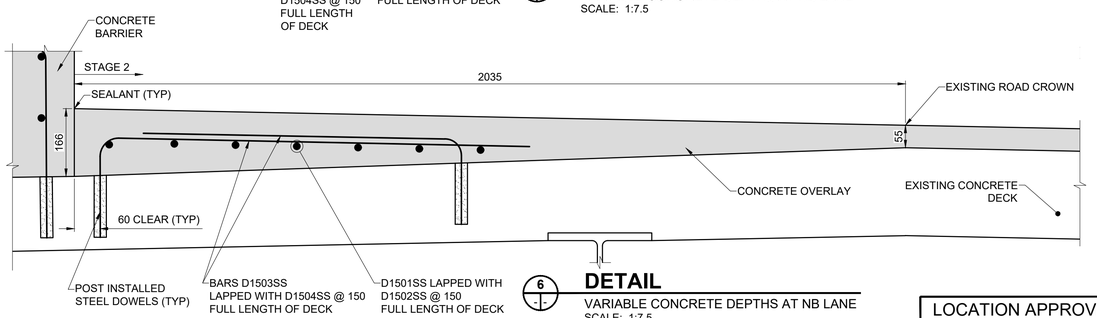

6 DETAIL
VARIABLE CONCRETE DEPTHS AT NB LANE
SCALE: 1:7.5

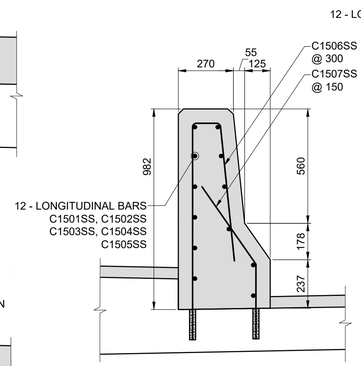

1 WEST BARRIER
SCALE: 1:15

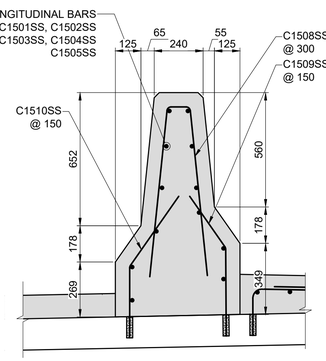

2 MEDIAN BARRIER
SCALE: 1:15

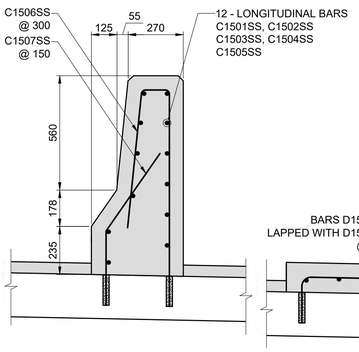

3 EAST BARRIER
SCALE: 1:15

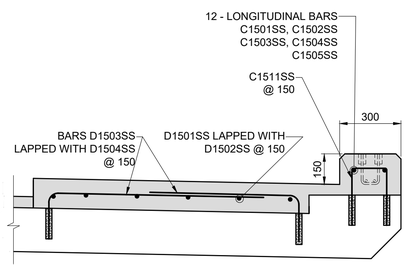

4 EAST CURB
SCALE: 1:15

BID OPPORTUNITY No. 602-2018

STRUCTURAL CONCRETE NOTES:

1. EPOXY GROUT FOR DOWELS SHALL BE HILTI HIT-RE 500-V3 OR EQUIVALENT.
2. ALL STEEL DOWELS SHALL BE 15M @ 150 O.C. WITH 100MM EMBEDMENT UNLESS NOTED OTHERWISE.

ENGINEERS GEOSCIENTISTS MANITOBA
Certificate of Authorization
MORRISON HERSHFIELD
No. 1736

METRIC
WHOLE NUMBERS INDICATE MILLIMETRES
DECIMALIZED NUMBERS INDICATE METRES

LOCATION APPROVED
UNDERGROUND STRUCTURES

SUPR. U/G STRUCTURES DATE
COMMITTEE

NOTE:
LOCATION OF UNDERGROUND STRUCTURES AS SHOWN ARE BASED ON THE BEST INFORMATION AVAILABLE BUT NO GUARANTEE IS GIVEN THAT ALL EXISTING UTILITIES ARE SHOWN OR THAT THE GIVEN LOCATIONS ARE EXACT. CONFIRMATION OF EXISTENCE AND EXACT LOCATION OF ALL SERVICES MUST BE OBTAINED FROM THE INDIVIDUAL UTILITIES BEFORE PROCEEDING WITH CONSTRUCTION.

BM
ELEV

No.	REVISIONS	YY/MM/DD	BY
D	ISSUED FOR TENDER	18/09/04	BAP
C	ISSUED FOR 95% DESIGN REVIEW	18/08/07	BAP
B	ISSUED FOR 50% DESIGN REVIEW REV 1	18/06/28	AF
A	ISSUED FOR 50% DESIGN REVIEW	18/04/03	AF

MORRISON HERSHFIELD

DESIGNED BY	AF	CHECKED BY	YM
DRAWN BY	ALP	APPROVED BY	BE
HOR SCALE	AS SHOWN	RELEASED FOR CONSTRUCTION	
VERT SCALE	AS SHOWN	N/A	
DATE		DATE	

PROFESSIONAL'S SEAL
PROVINCE OF MANITOBA
A. FATHI
Member
41159
REGISTERED PROFESSIONAL ENGINEER

CONSULTANT FILE NAME
W160034 - DD SS.DWG

Winnipeg
THE CITY OF WINNIPEG
PUBLIC WORKS DEPARTMENT
ENGINEERING DIVISION

EMPRESS STREET PROJECT
OVERPASS REHABILITATION WORKS
SUPERSTRUCTURE
STRUCTURAL CONCRETE AND REINFORCING DETAILS

CITY DRAWING NUMBER
P-3494-107
SHEET 107 OF 168
DRAWING No. 107
REV D

ISO A1 - 594mm x 841mm

Q:\Winnipeg\Proj\W160344 Design\1 Drawings\06 Sheets\Detailed Design\Structural\W160034 - DD SS.dwg Last Saved: 9/6/2018 9:59 PM by AHeppner Plotted: 9/6/2018 10:08 PM by Alex Heppner