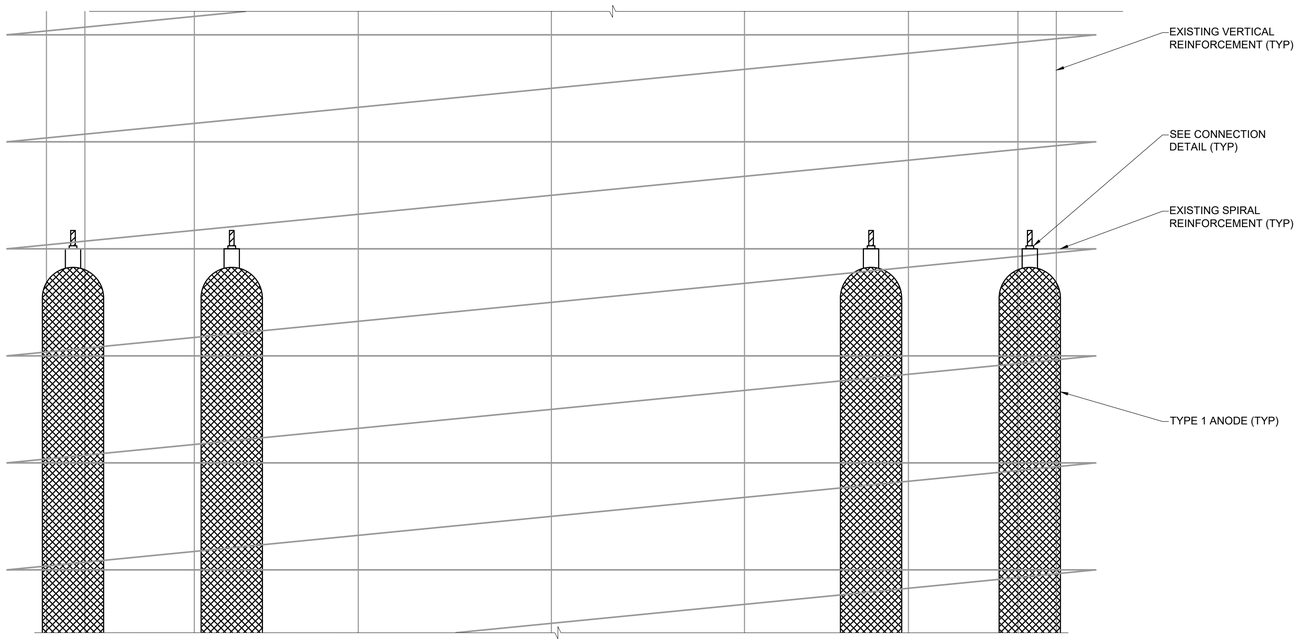

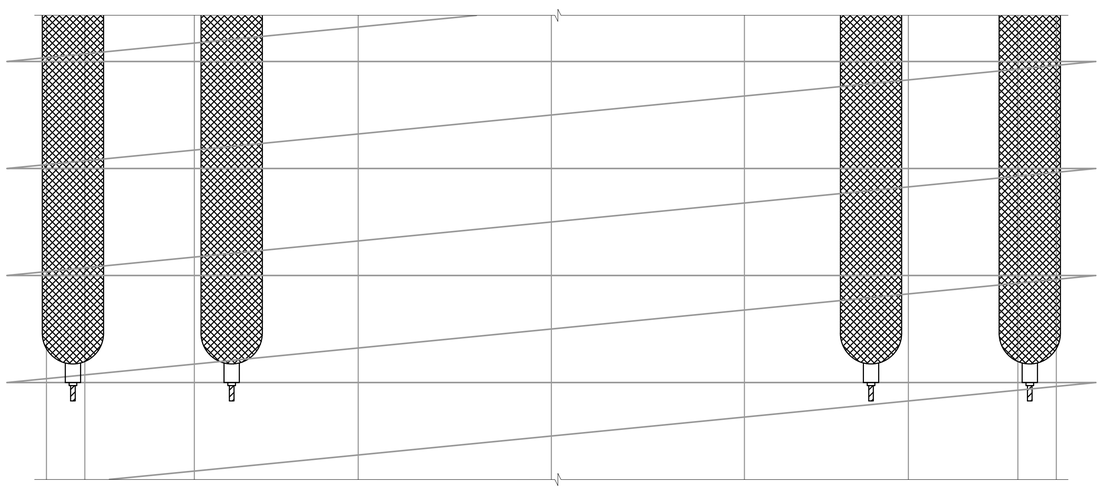

ELEVATION - CENTRE PIER COLUMN ANODE INSTALLATION

SCALE NTS

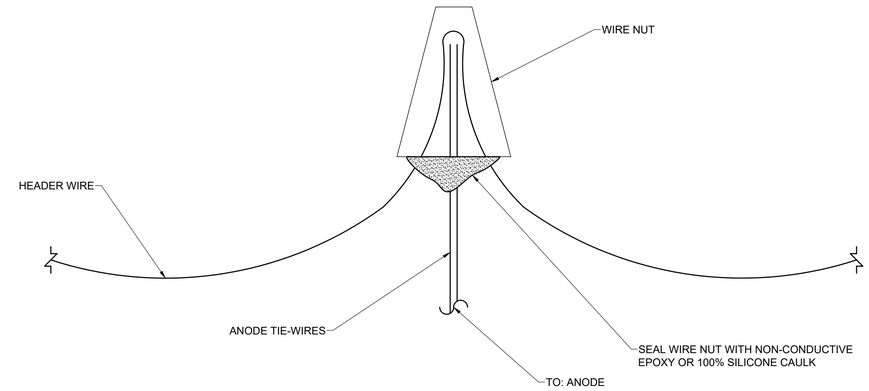

WIRE NUT SERIES CONNECTION JUNCTION

SCALE NTS

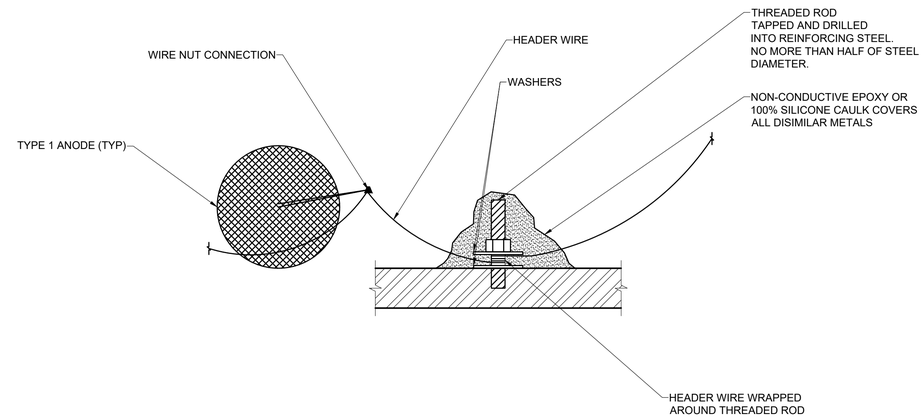

NUT AND WASHER CINCH INSTALLATION

SCALE NTS

ANODE CONNECTION INSTRUCTIONS:

1. COMPLETE EXCAVATION OF CONCRETE REPAIR AREA.
2. LAYOUT TYPE 1 ANODE AS PER MANUFACTURERS RECOMMENDATIONS.
3. ATTACH 3/16" Ø THREADED ROD TO REINFORCING STEEL BY DRILL AND TAP.
4. CONNECT HEADER WIRE TO STUD AND SECURE WITH NUT AND WASHERS EITHER SIDE OF WIRE.
5. ENSURE ALL CONNECTIONS OF DISSIMILAR METALS ARE COATED WITH SILICONE OR NON-CONDUCTIVE EPOXY TO PREVENT CORROSION.
6. SECURE ANODE AS REQUIRED AND COMPLETE POURBACK OF REPAIR.

BID OPPORTUNITY No. 602-2018

ENGINEERS GEOSCIENTISTS MANITOBA
Certificate of Authorization
MORRISON HERSHFIELD
No. 1736

METRIC
WHOLE NUMBERS INDICATE MILLIMETRES
DECIMALIZED NUMBERS INDICATE METRES

LOCATION APPROVED
UNDERGROUND STRUCTURES

SUPR. U/G STRUCTURES COMMITTEE — DATE

NOTE:
LOCATION OF UNDERGROUND STRUCTURES AS SHOWN ARE BASED ON THE BEST INFORMATION AVAILABLE BUT NO GUARANTEE IS GIVEN THAT ALL EXISTING UTILITIES ARE SHOWN OR THAT THE GIVEN LOCATIONS ARE EXACT. CONFIRMATION OF EXISTENCE AND EXACT LOCATION OF ALL SERVICES MUST BE OBTAINED FROM THE INDIVIDUAL UTILITIES BEFORE PROCEEDING WITH CONSTRUCTION.

BM
ELEV

No.	REVISIONS	YY/MM/DD	BY
D	ISSUED FOR TENDER	18/09/04	BAP
C	ISSUED FOR 95% DESIGN REVIEW	18/08/07	BAP
B	ISSUED FOR 50% DESIGN REVIEW REV 1	18/06/28	AG
A	ISSUED FOR 50% DESIGN REVIEW	18/04/03	AF

MORRISON HERSHFIELD

DESIGNED BY	AG	CHECKED BY	BAP
DRAWN BY	AH	APPROVED BY	BE
HOR SCALE	AS SHOWN	RELEASED FOR CONSTRUCTION	
VERT SCALE	AS SHOWN	N/A	
DATE		DATE	

PROFESSIONAL'S SEAL
PROVINCE OF MANITOBA
A.D.G. GILARSKI
Member
32144
REGISTERED PROFESSIONAL ENGINEER

CONSULTANT FILE NAME
W160034 - DD SU.DWG

Winnipeg
THE CITY OF WINNIPEG
PUBLIC WORKS DEPARTMENT
ENGINEERING DIVISION

EMPRESS STREET PROJECT
OVERPASS REHABILITATION WORKS
SUBSTRUCTURE
TYPE 1 ANODE INSTALLATION DETAILS

CITY DRAWING NUMBER: P-3494-100
SHEET 100 OF 168
DRAWING No. 100 REV D

ISO A1 - 594mm x 841mm
O:\Winnipeg\Proj\W160344 Design\1 Drawings\06 Sheets\Detailed Design\Structural\W160034 - DD SU.dwg Last Saved: 9/5/2018 9:28 AM by AHeppner Plotted: 9/6/2018 10:04 PM by Alex Heppner