ALL DRAWINGS AND SPECIFICATIONS ARE THE PROPERTY OF THE CONSULTANT.

NO REPRODUCTIONS MAY BE MADE WITHOUT THE CONSENT OF THE CONSULTANT AND ALL REPRODUCTIONS MUST BEAR THE NAME OF THE CONSULTANT.

THE CONTRACTOR SHALL VERIFY ALL DIMENSIONS, DATUMS AND LEVELS NOTED ON THE DRAWINGS WITH THE CONDITIONS ON SITE AND SHALL BE RESPONSIBLE FOR REPORTING ANY ERRORS OR OMISSIONS TO THE ENGINEER FOR ADJUSTMENTS.

THIS DRAWING SHALL NOT BE SCALED.

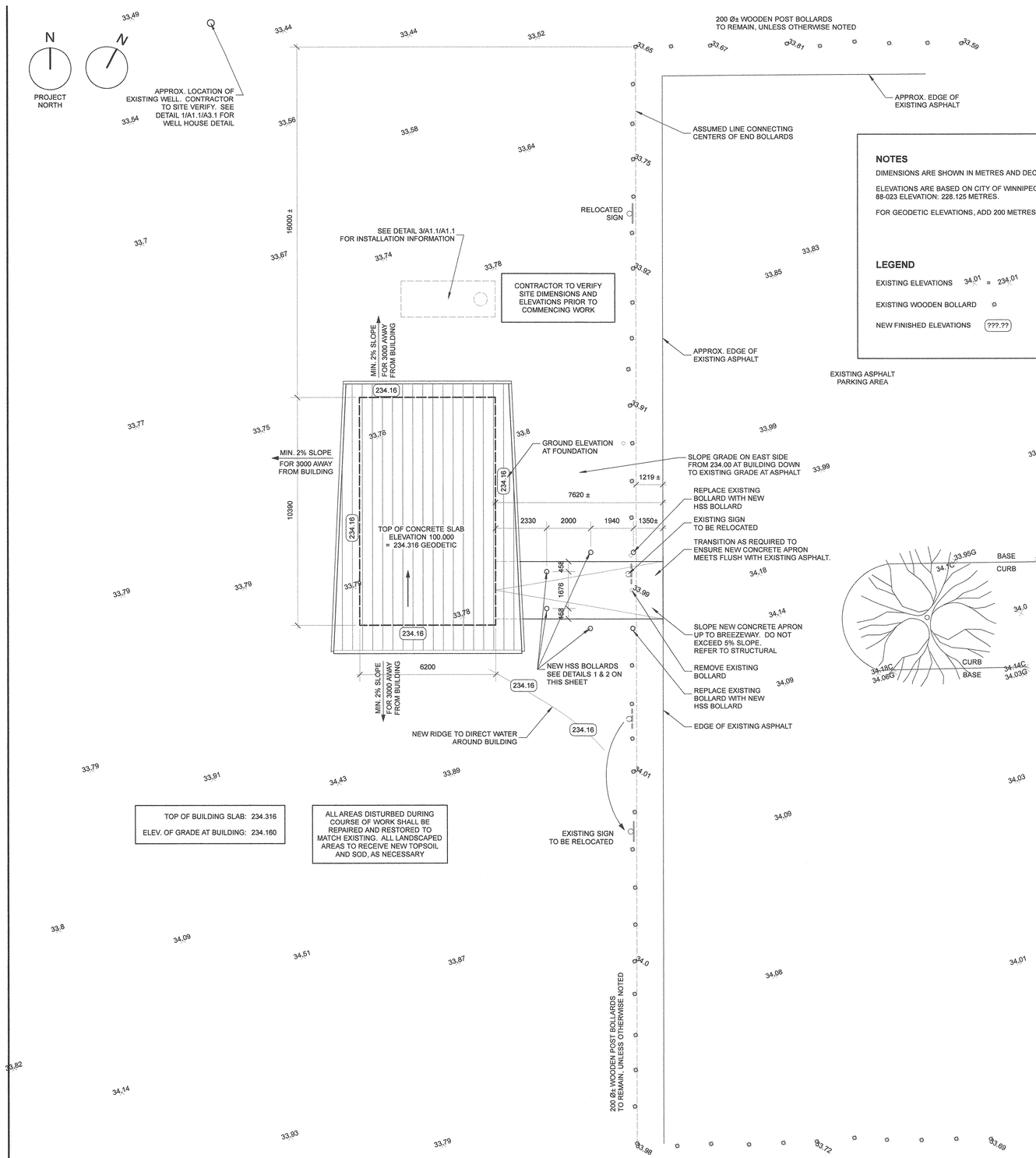

TOP OF BUILDING SLAB: 234.316

ELEV. OF GRADE AT BUILDING: 234.160

ALL AREAS DISTURBED DURING COURSE OF WORK SHALL BE REPAIRED AND RESTORED TO MATCH EXISTING. ALL LANDSCAPED AREAS TO RECEIVE NEW TOPSOIL AND SOD, AS NECESSARY

NOTES

DIMENSIONS ARE SHOWN IN METRES AND DECIMALS OF A METRE.

ELEVATIONS ARE BASED ON CITY OF WINNIPEG BENCHMARK NUMBERED 88-023 ELEVATION: 228.125 METRES.

FOR GEODETIC ELEVATIONS, ADD 200 METRES.

LEGEND

EXISTING ELEVATIONS 34.01 = 234.01

EXISTING WOODEN BOLLARD

NEW FINISHED ELEVATIONS ???.??

A A1.1 A1.1 SITE PLAN 1:100

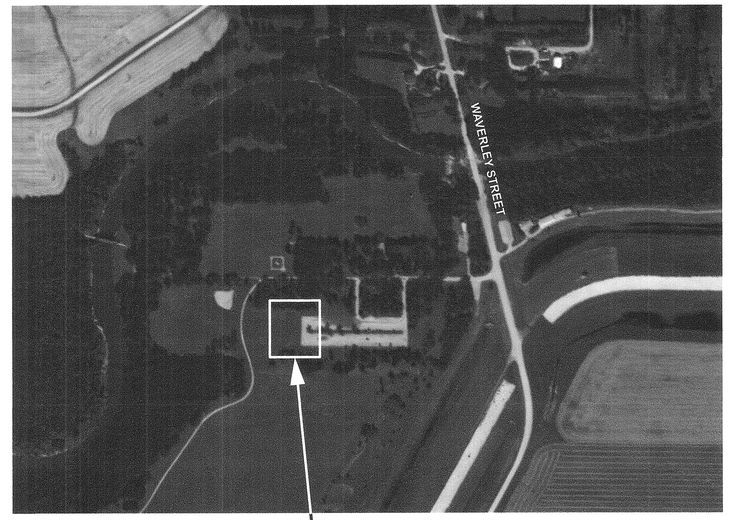

B A1.1 A1.1 LOCATION PLAN nts

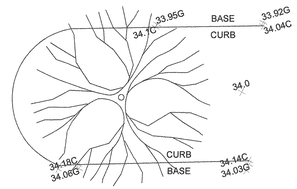

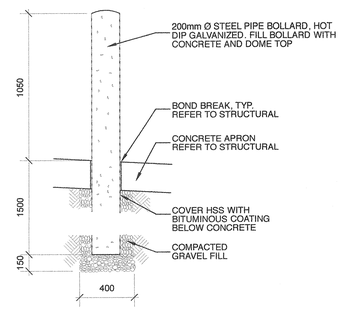

1 A1.1 A1.1 BOLLARD THROUGH SLAB 1:20

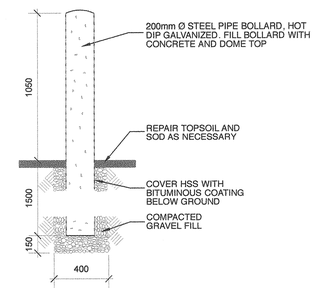

2 A1.1 A1.1 BOLLARD AT GRASS 1:20

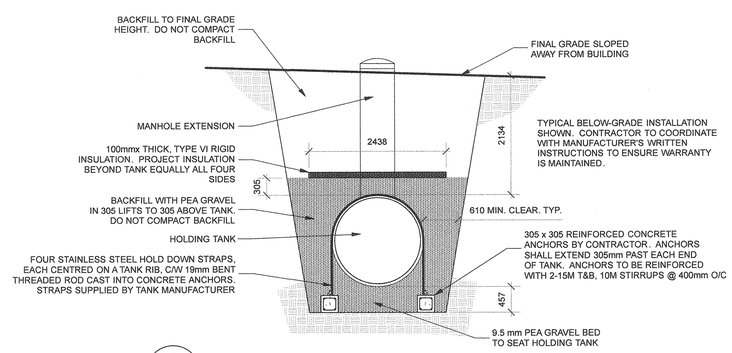

TYPICAL BELOW-GRADE INSTALLATION SHOWN. CONTRACTOR TO COORDINATE WITH MANUFACTURER'S WRITTEN INSTRUCTIONS TO ENSURE WARRANTY IS MAINTAINED.

3 A1.1 A1.1 HOLDING TANK SECTION 1:50

Winnipeg

Revisions

Date	Revision
May 31, 2018	Issued for Construction

Northern Sky Architecture Inc.

100-128 James Avenue
Winnipeg, Manitoba, Canada
R3B 0N8
contact@nsai.ca
Fax 204.956.7979

204.943.6767

Stamp

PROVINCE OF MANITOBA
NORTHERN SKY ARCHITECTURE INC.
No. 031
APPROVED ARCHITECTURAL CORPORATION

Stamp

PROVINCE OF MANITOBA
KENT D. WOLOSCHUK
MAY 31, 2018
REGISTERED ARCHITECT

Project

New La Barriere Park Washroom Project

La Barriere Park, Manitoba

drawing title	KEY PLAN, SITE PLAN		
scale	as noted	designed by	kbb
date	May, 2018	drawn by	kbb
project no.	16.235	reviewed by	dko
bid opp. no.	436-2018	sheet A1.1	REV.