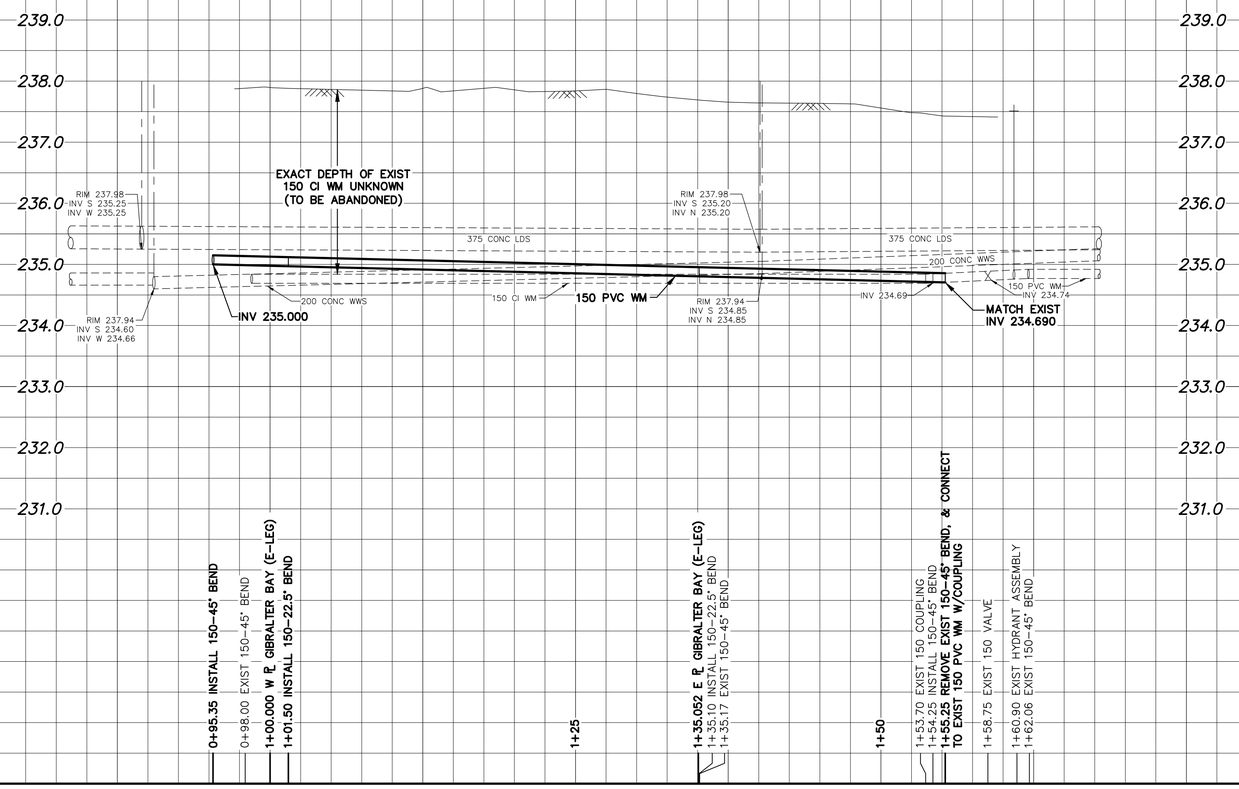

NOTE: CHAINAGES SHOWN ARE ALONG W. ℄ OF GIBRALTER BAY (E-LEG)

GIBRALTER BAY (E-LEG)

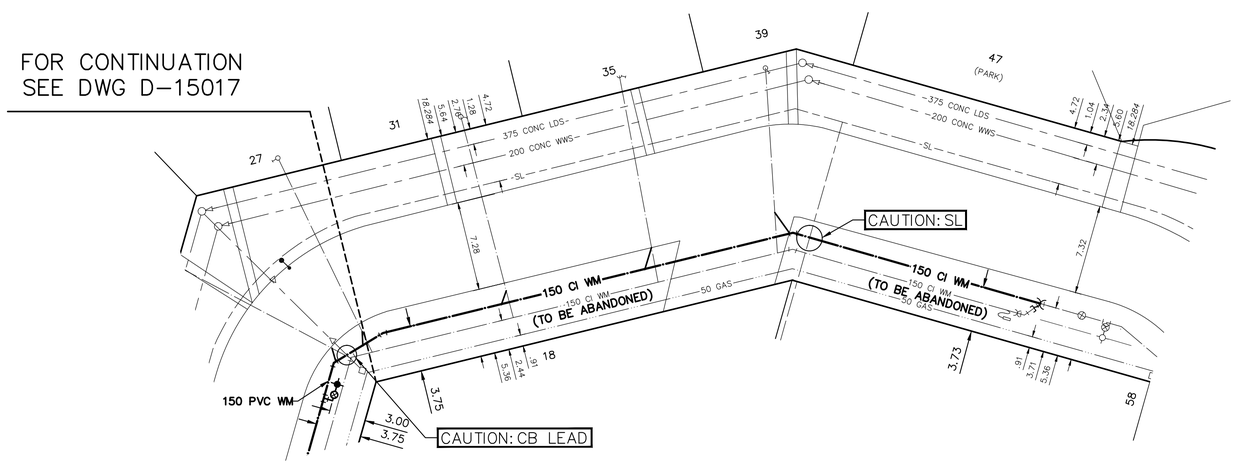

FOR WATER SERVICE TABLE SEE D-15017

FOR INDEX SEE D-15012

NOTE: ALL VALVES TO BE INSTALLED CLOCKWISE TO CLOSE

METRIC
WHOLE NUMBERS INDICATE MILLIMETRES
DECIMALIZED NUMBERS INDICATE METRES

0.0 5.0 10.0 15.0 20.0 25.0

WARNING

IF POWER EQUIPMENT OR EXPLOSIVES ARE TO BE USED FOR EXCAVATION ON THIS PROJECT THE CONTRACTOR MUST:

1) NOTIFY THE GAS COMPANY OF THE PROPOSED LOCATION OF EXCAVATION.

2) TAKE PRECAUTION TO AVOID DAMAGE TO GAS COMPANY INSTALLATIONS.

SEE PROVINCIAL REGULATION 210/72 FOR DETAILS

LOCATION APPROVED
UNDERGROUND STRUCTURES

SUPV. U/G STRUCTURES COMMITTEE DATE

NOTE:

LOCATION OF UNDERGROUND STRUCTURES AS SHOWN ARE BASED ON THE BEST INFORMATION AVAILABLE BUT NO GUARANTEE IS GIVEN THAT ALL EXISTING UTILITIES ARE SHOWN OR THAT THE GIVEN LOCATIONS ARE EXACT. CONFIRMATION OF EXISTENCE AND EXACT LOCATION OF ALL SERVICES MUST BE OBTAINED FROM THE INDIVIDUAL UTILITIES BEFORE PROCEEDING WITH CONSTRUCTION.

B.M.
ELEV.

NO.	REVISIONS	DATE	BY

DESIGNED BY MJK
CHECKED BY SC
DRAWN BY RS
APPROVED BY KZ
SCALE:
HORIZONTAL 1:250
VERTICAL 1:50
RELEASED FOR CONSTRUCTION
DATE 2018 03 22
K.ZUREK
DATE 2018 03 22
PLOT DATE: 2018 03 22

ENGINEER'S SEAL
ORIGINAL SIGNED BY S.R.J. COURNOYER 18/03/22

CONSULTANT DRAWING NUMBER
–

BID OPPORTUNITY: 132-2018
CONTRACT NUMBER: 5

Winnipeg

THE CITY OF WINNIPEG

WATER AND WASTE DEPARTMENT
ENGINEERING DIVISION

2018 WATER MAIN RENEWALS
CONTRACT 2

GIBRALTER BAY (E-LEG)

GIBRALTER BAY (N-LEG) TO GIBBRALTER BAY (S-LEG)

SHEET 8 OF 12

CITY DRAWING NUMBER
D-15018

FILE PATH: R:\DRAWINGS\WATER\RENEWAL\2018 RENEWALS\Water Main renewals\Contract 5\Contruction dwgs\
FILE NAME: NORMANDY.dwg