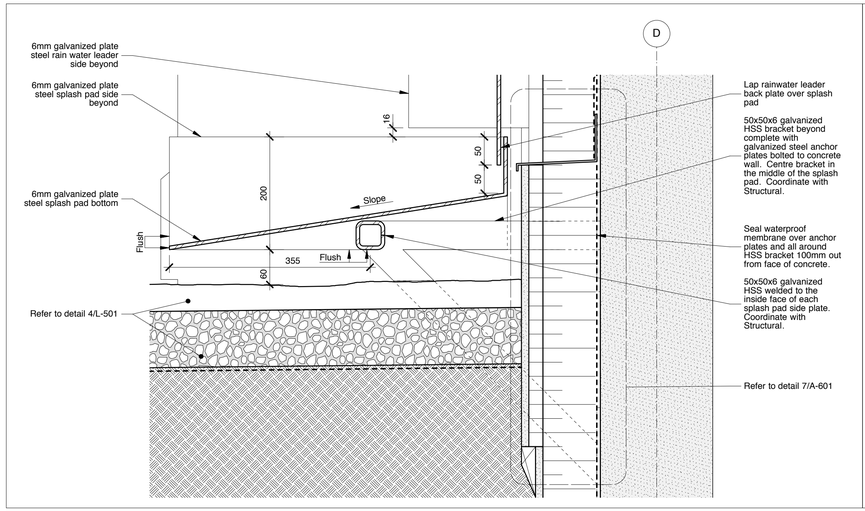

9 A-600 Section Detail - Steel Splash Pad
1:5

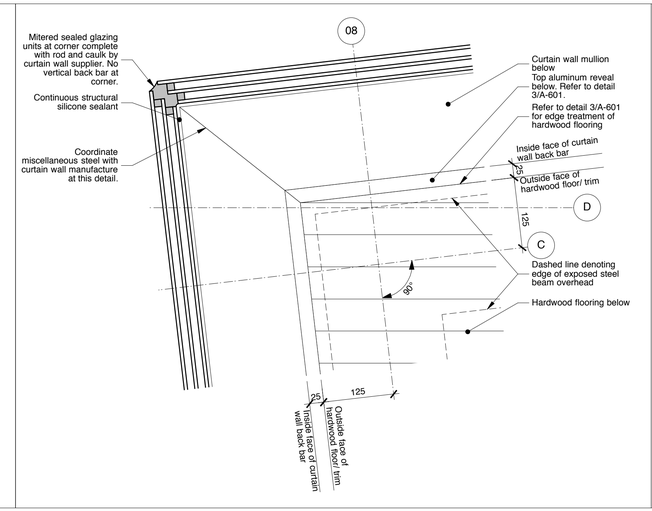

6 A-600 Plan Detail - Glazed Corner at Grids 08 and C
1:5

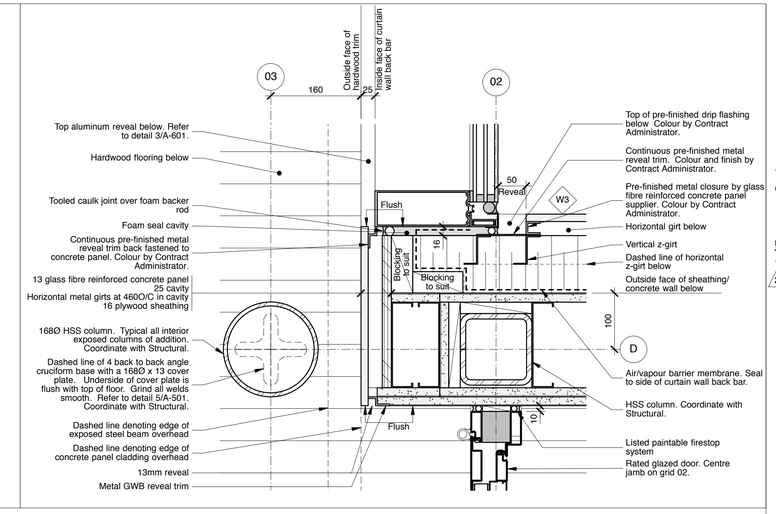

3 A-600 Plan Detail - Curtain Wall Meeting Concrete Panel Wall Finish at Grids 02 and D
1:5

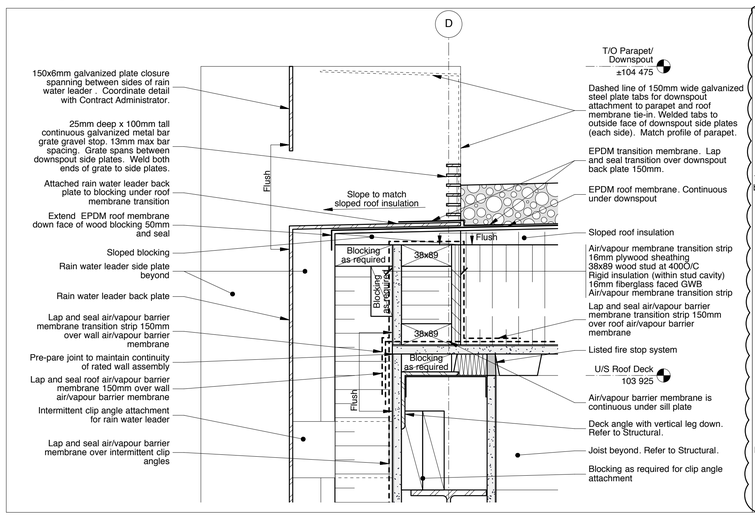

8 A-600 Section Detail - Downspout Opening in Parapet
1:5

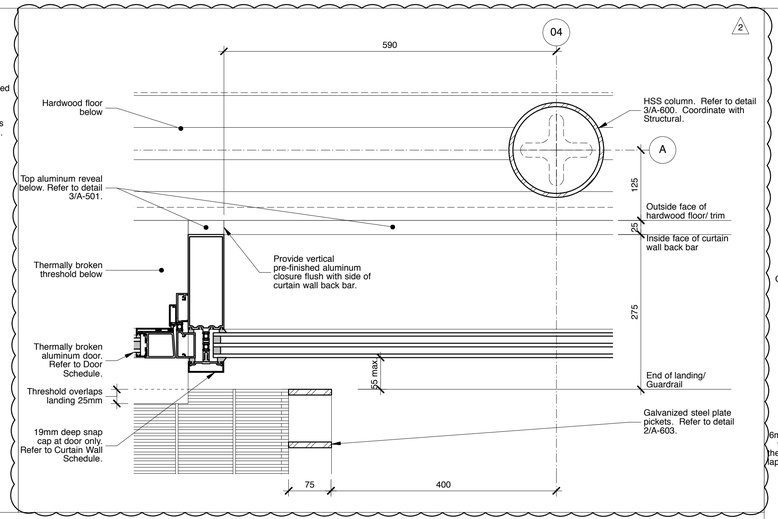

5 A-600 Plan Detail - Door Jamb at Exterior Exit Stair
1:5

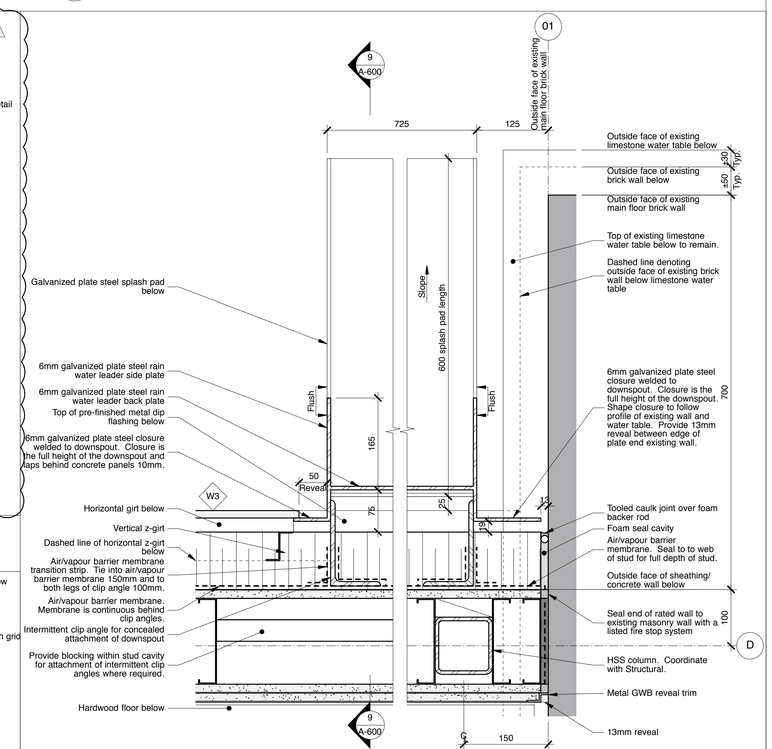

2 A-600 Plan Detail - Steel Plate Rain Water Leader
1:5

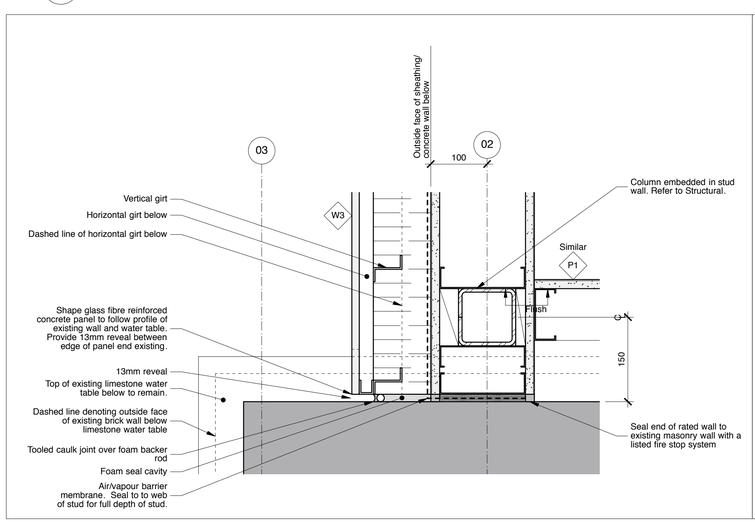

7 A-600 Plan Detail - Concrete Panel Cladding Meeting Existing Brick Wall
1:5

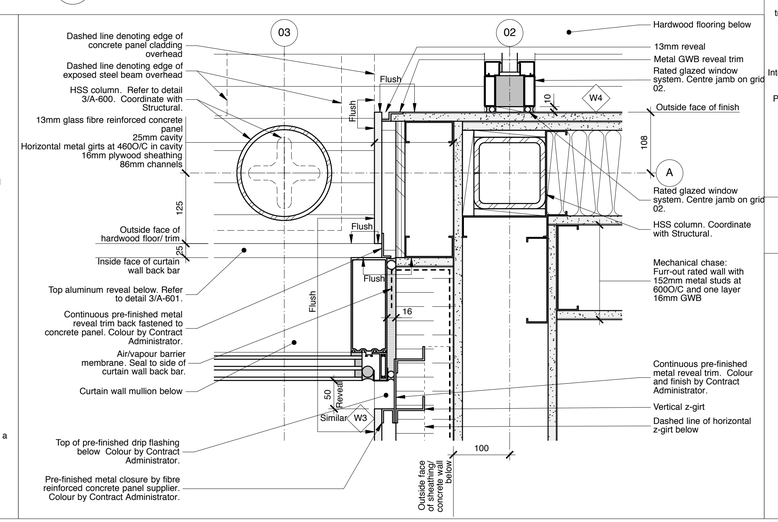

4 A-600 Plan Detail - Curtain Wall Meeting Concrete Panel Wall Finish at Grids 02 and A
1:5

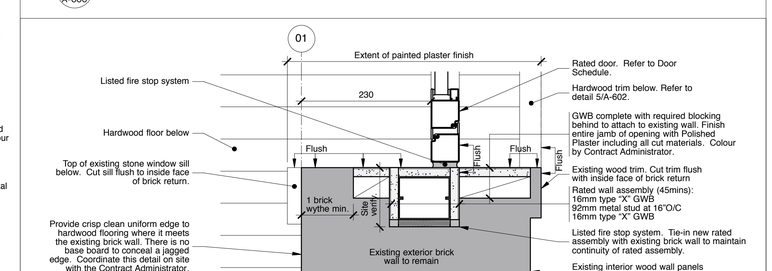

1 A-600 Plan Detail - Polished Plaster Jamb
1:5

PUBLICCITY
Public City Architecture Inc
707 Sara Avenue
Winnipeg Manitoba
R3G 0V8 204.475.9323
publicitycyarchitecture.com

Owner

City of Winnipeg

Rev. No.	Date	Revision Notes
1.	2017.11.28	Issued for Construction
2.	2018.01.30	Issued for Addendum 3

This drawing must not be scaled. The contractors shall verify all dimensions and other data on site prior to commencement of work. Discrepancies, errors, and omissions are to be reported to Public City Architecture Inc. prior to proceeding with the Work.

Drawings and specifications as instruments of service are the property of Public City Architecture Inc.; the copyright in the same being reserved.

No reproduction or revision to these drawings may be made without the permission of Public City Architecture Inc., and when made, must bear their name. All prints to be returned to Public City Architecture Inc. upon request.

Project

Cornish Library Renovation

Drawing

Details

Drawn By	Reviewed By
MP	PS
Scale	Drawing No.
As Noted	A-600
Date	Project No.
2016.07.18	1503a