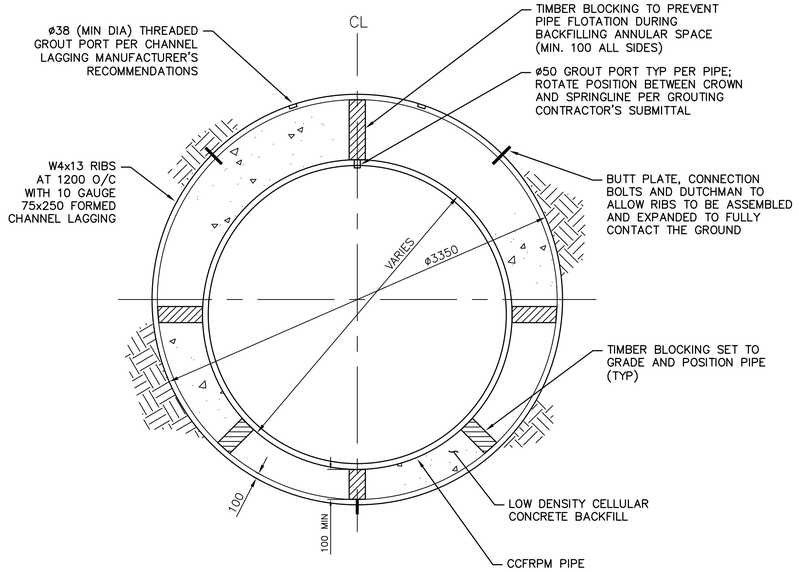

1 TUNNEL DETAIL
NTS

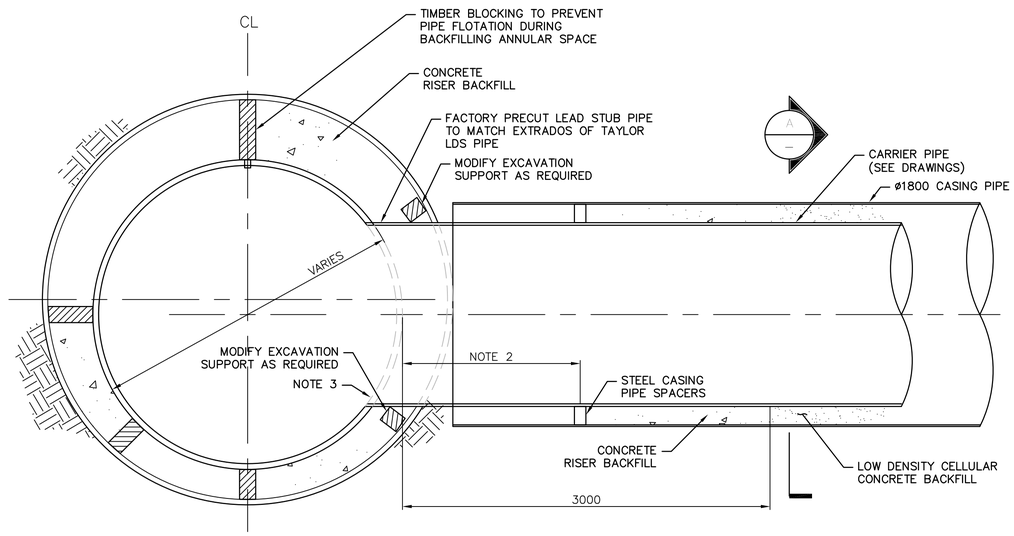

NOTE
1. ONLY ONE STUB SHOWN FOR CLARITY.
2. STEEL CASING PIPE SPACERS PER PIPE MANUFACTURER'S RECOMMENDATIONS
3. LAMINATE STUB CONNECTION PER CCFRPM PIPE MANUFACTURER'S RECOMMENDATIONS.

2 STUB TUNNEL CONNECTION DETAIL
NTS

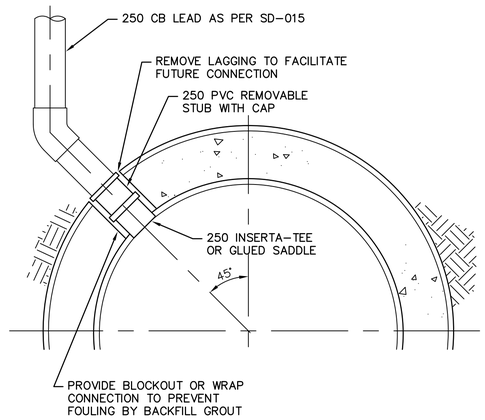

3 CATCHBASIN CONNECTION DETAIL
NTS

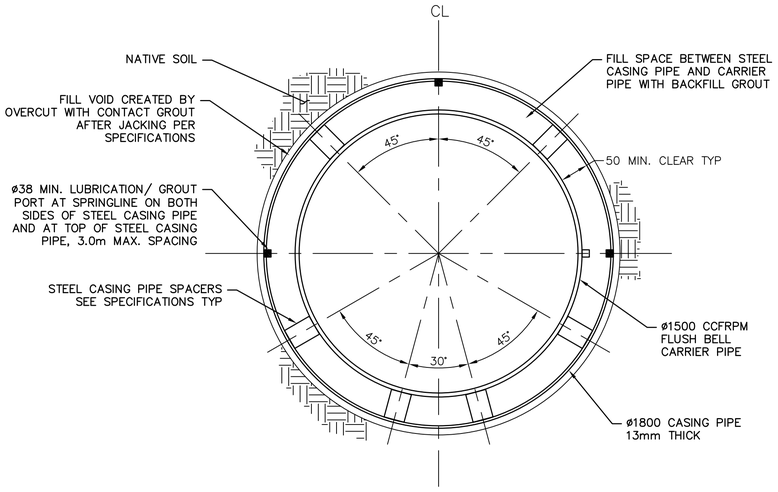

NOTE:
ALTERNATIVE CASING DIAMETER MAY BE PROPOSED BY THE CONTRACTOR, SUBJECT TO CONTRACT REQUIREMENTS AND CONTRACT ADMINISTRATOR'S APPROVAL.

A CCFRPM TUNNEL, FLUSH BELL PIPE (WITH CASING PIPE)
NTS

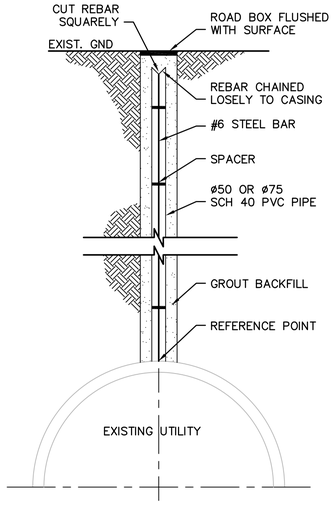

UTILITY SETTLEMENT MONITORING POINT

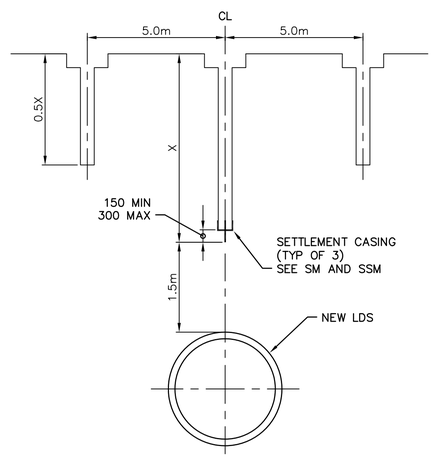

SURFACE AND SUBSURFACE MONITORING ARRAY

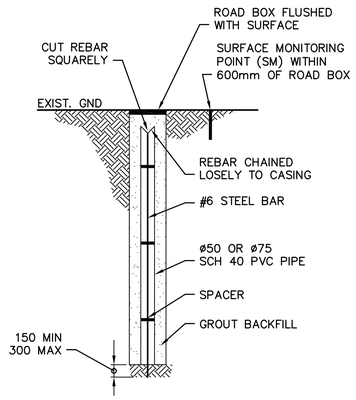

SURFACE AND SUBSURFACE MONITORING POINTS (SM AND SSM)

4 MONITORING POINT DETAILS
NTS

APEGM
Certificate of Authorization
CH2M HILL Canada Ltd.
No. 1441

B.M. ELEV.			
B	ISSUED FOR RFQ	11/2017	JBC
A	ISSUED FOR REVIEW	10/2017	JBC
NO.	REVISIONS	DATE	BY

KGS GROUP CONSULTING ENGINEERS

ch2m

DESIGNED BY SDG	CHECKED BY MD
DRAWN BY JBC	APPROVED BY
HOR. SCALE: AS NOTED VERTICAL: –	RELEASED FOR CONSTRUCTION:
DATE	DATE

ENGINEER'S SEAL

PRELIMINARY
NOT FOR CONSTRUCTION

CONSULTANT DRAWING NO.
C-504

Winnipeg

THE CITY OF WINNIPEG
WATER AND WASTE DEPARTMENT

PROJECT TITLE
COCKBURN AND CALROSSIE COMBINED SEWER RELIEF WORKS – CONTRACT 5
TUNNELLING DETAILS

SHEET OF 20 OF 25
COMPUTER FILE NAME C-504.dwg
CITY DRAWING NUMBER LD-8431

FileName C:\pw_workdir\ch2mhill_wbg\jcortez1\d0436657\