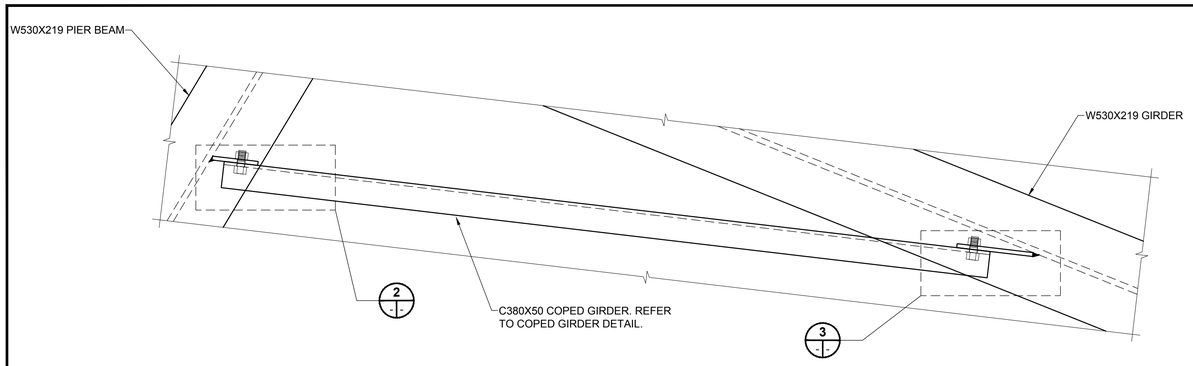

1/12|14 DETAIL - COPED GIRDER CONNECTIONS
SCALE: 1:10

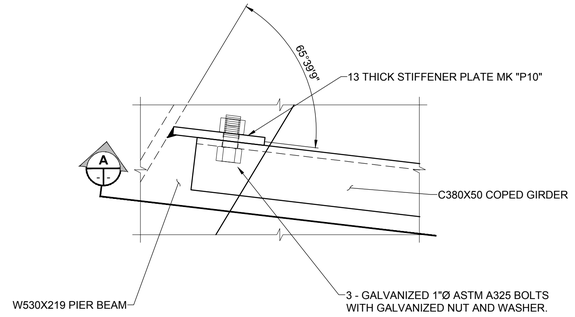

2 DETAIL - COPED GIRDER TO PIER BEAM CONNECTION
SCALE: 1:5

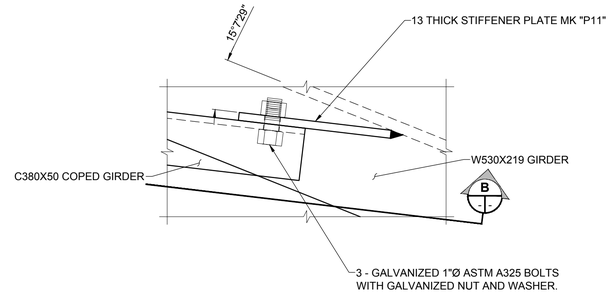

3 DETAIL - COPED GIRDER TO GIRDER CONNECTION
SCALE: 1:5

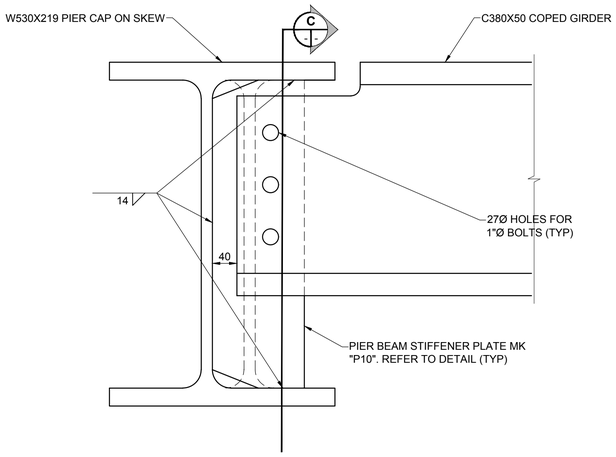

A DETAIL - COPED GIRDER TO PIER BEAM CONNECTION
SCALE: 1:5

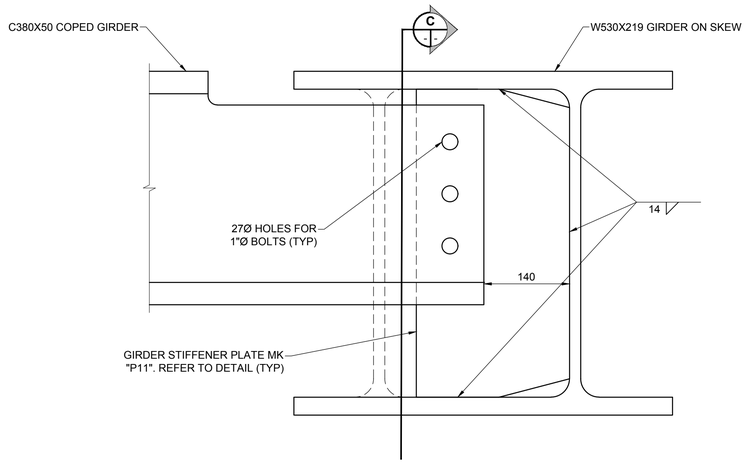

B DETAIL - COPED GIRDER TO GIRDER CONNECTION
SCALE: 1:5

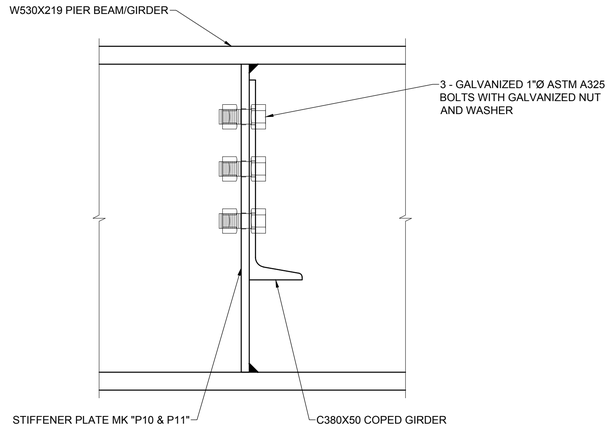

C DETAIL - COPED GIRDER CONNECTION
SCALE: 1:5

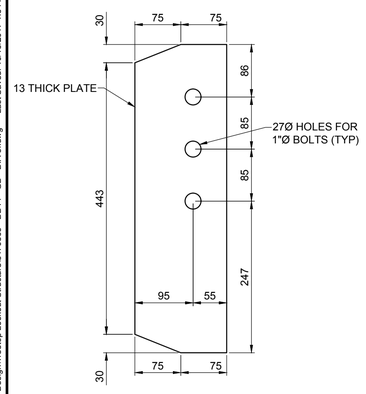

STIFFENER PLATE MK "P10"
SCALE: 1:5

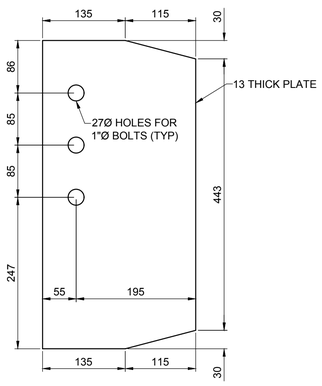

STIFFENER PLATE MK "P11"
SCALE: 1:5

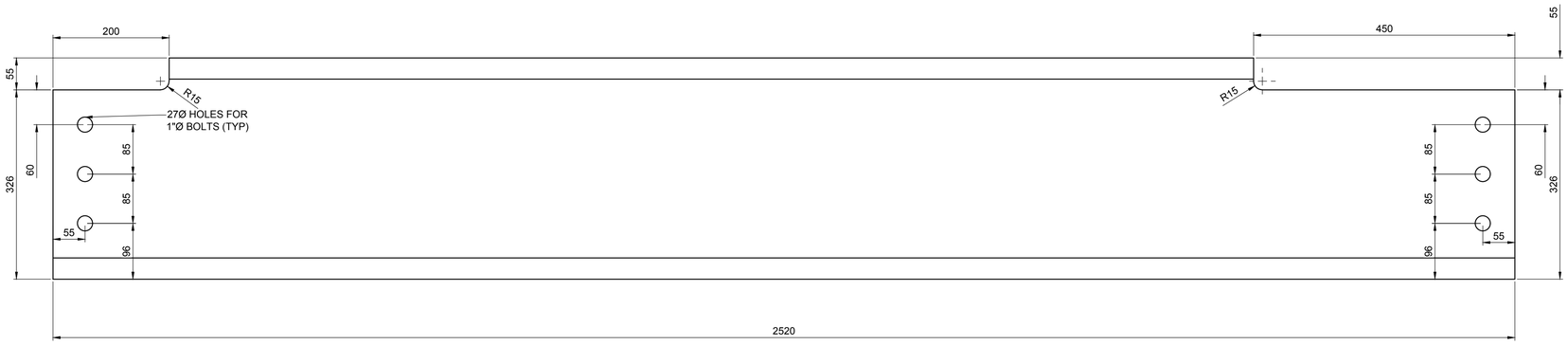

COPED GIRDER DETAILS
SCALE 1:5

BID OPPORTUNITY No. 754-2017

ENGINEERS GEOSCIENTISTS MANITOBA
Certificate of Authorization
MORRISON HERSHFIELD
No. 1736

METRIC
WHOLE NUMBERS INDICATE MILLIMETRES
DECIMALIZED NUMBERS INDICATE METRES

LOCATION APPROVED
UNDERGROUND STRUCTURES

SUPR. U/G STRUCTURES COMMITTEE — DATE

NOTE:
LOCATION OF UNDERGROUND STRUCTURES AS SHOWN ARE BASED ON THE BEST INFORMATION AVAILABLE BUT NO GUARANTEE IS GIVEN THAT ALL EXISTING UTILITIES ARE SHOWN OR THAT THE GIVEN LOCATIONS ARE EXACT. CONFIRMATION OF EXISTENCE AND EXACT LOCATION OF ALL SERVICES MUST BE OBTAINED FROM THE INDIVIDUAL UTILITIES BEFORE PROCEEDING WITH CONSTRUCTION.

BM
ELEV

No.	REVISIONS	YY/MM/DD	BY
0	ISSUED FOR TENDER	17/10/13	DAN

MORRISON HERSHFIELD

DESIGNED BY	AG	CHECKED BY	AF
DRAWN BY	AH	APPROVED BY	BE
HOR SCALE	AS SHOWN	RELEASED FOR CONSTRUCTION	
VERT SCALE	AS SHOWN		
DATE	17/10/13	DATE	

PROFESSIONAL'S SEAL
PROVINCE OF MANITOBA
A. FATHI
Member
41159
REGISTERED PROFESSIONAL ENGINEER

CONSULTANT FILE NAME
5170563 - DD14 - GD - DIA 3..dwg

Winnipeg
THE CITY OF WINNIPEG
PUBLIC WORKS DEPARTMENT
ENGINEERING DIVISION

TACHE PROMENADE TREETOP LOOKOUT

GIRDERS AND DIAPHRAGMS 3

CITY DRAWING NUMBER: B250-17-40
SHEET 40 OF 70
DRAWING No. 14 REV 0

ISO A1 - 594mm x 841mm
O:\Winnipeg\Proj\5170563\09. Drawing\05. Design\06. Sheets\Detailed Design\Treetop Lookout Structure\5170563 - DD14 - GD - DIA 3..dwg Last Saved: 10/13/2017 1:54 PM by AGilarski Plotted: 10/13/2017 2:32 PM by Alex Hepponer