ISO A1 - 594mm x 841mm

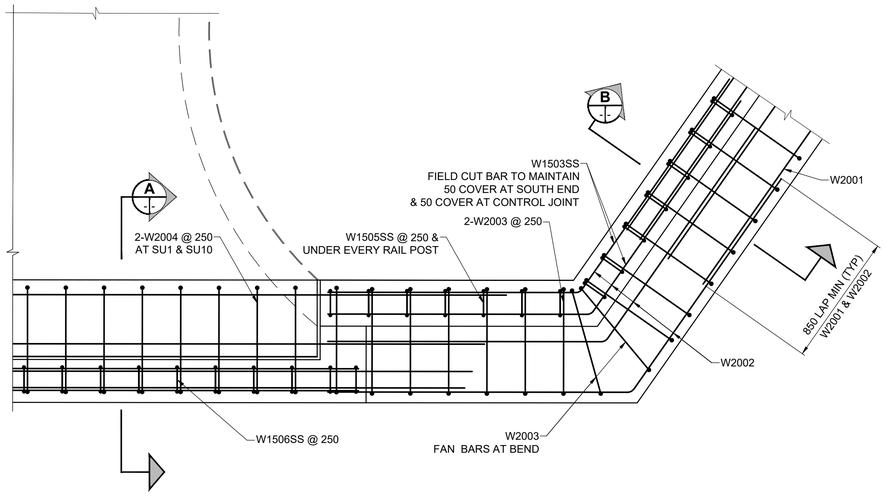

1 05 06 DETAIL - CORBEL BEAM BEND LINE REINFORCING

SCALE: 1:20

NOTE:
WING WALL REINFORCING NOT SHOWN FOR CLARITY.
SEE WING WALL REINFORCING DETAIL.

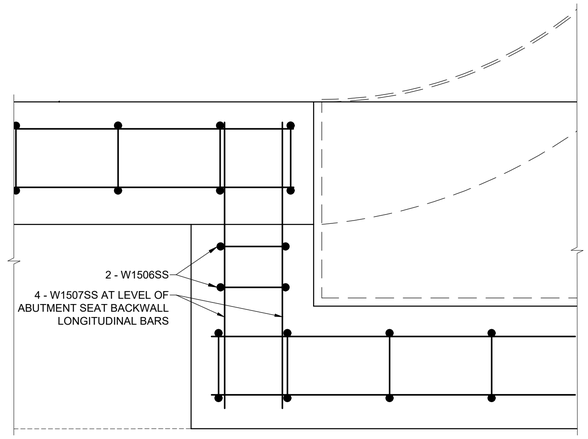

2 05 06 DETAIL - JUMP SLAB WING WALL REINFORCING

SCALE: 1:7.5

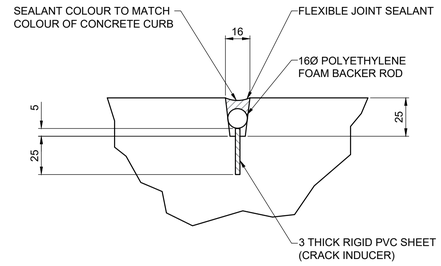

3 06 06 DETAIL - CURB CONTROL JOINT

SCALE: 1:2

NOTE:
THE CONCRETE CURBS SHALL BE PLACED CONTINUOUSLY AT THE SAME TIME AS THE SHEET PILE CAPPING BEAM, WITH FORMED CONTRACTION JOINTS LOCATED BETWEEN ALUMINUM BICYCLE RAIL POSTS, SPACED AS SHOWN IN ELEVATION VIEW. AT CONTRACTION JOINTS, LONGITUDINAL REINFORCEMENT SHALL BE DISCONTINUOUS AND HAVE AT LEAST 50 mm CONCRETE COVER FROM THE CENTERLINE OF THE JOINTS.

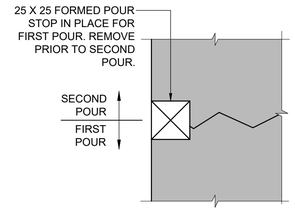

4 06 06 DETAIL - POUR STOP

SCALE: 1:2

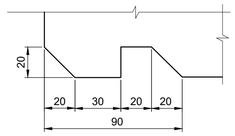

5 06 06 DETAIL - DRIP EDGE

SCALE: 1:2

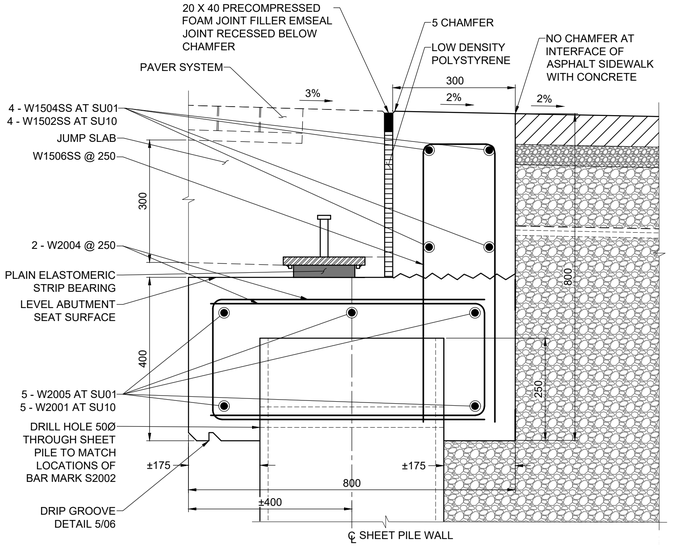

A -|- SECTION - SU01 & SU10

SCALE: 1:7.5

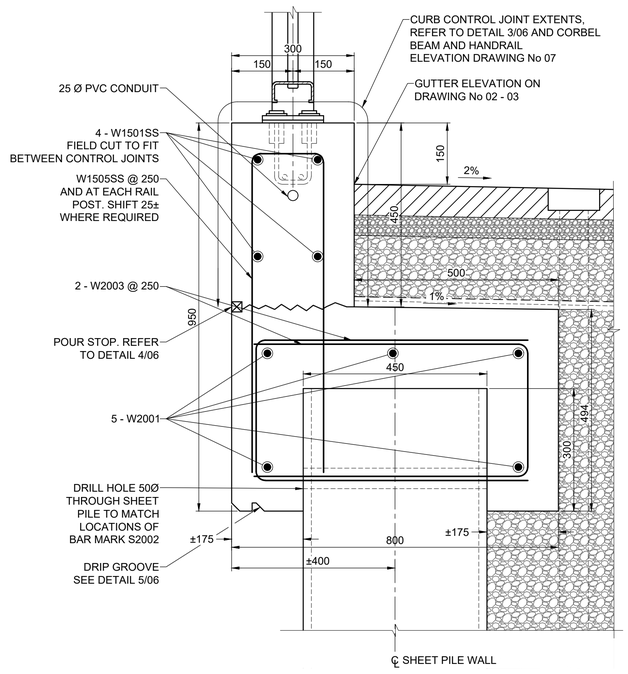

B -|- SECTION - CORBEL

SCALE: 1:7.5

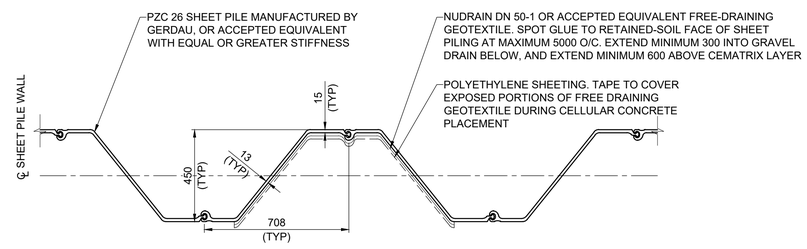

C 05 06 SECTION - TYPICAL SHEET PILING

SCALE: 1:15

BID OPPORTUNITY No. 754-2017

ENGINEERS GEOSCIENTISTS MANITOBA
Certificate of Authorization
MORRISON HERSHFIELD
No. 1736

METRIC
WHOLE NUMBERS INDICATE MILLIMETRES
DECIMALIZED NUMBERS INDICATE METRES

LOCATION APPROVED
UNDERGROUND STRUCTURES

SUPR. U/G STRUCTURES COMMITTEE — DATE

NOTE:
LOCATION OF UNDERGROUND STRUCTURES AS SHOWN ARE BASED ON THE BEST INFORMATION AVAILABLE BUT NO GUARANTEE IS GIVEN THAT ALL EXISTING UTILITIES ARE SHOWN OR THAT THE GIVEN LOCATIONS ARE EXACT. CONFIRMATION OF EXISTENCE AND EXACT LOCATION OF ALL SERVICES MUST BE OBTAINED FROM THE INDIVIDUAL UTILITIES BEFORE PROCEEDING WITH CONSTRUCTION.

BM
ELEV

No.	REVISIONS	YY/MM/DD	BY
0	ISSUED FOR TENDER	17/10/13	DAN

MORRISON HERSHFIELD

DESIGNED BY	TN	CHECKED BY	DAN
DRAWN BY	MS	APPROVED BY	BE
HOR SCALE	AS SHOWN	RELEASED FOR CONSTRUCTION	
VERT SCALE	AS SHOWN		
DATE	17/10/13	DATE	

PROFESSIONAL'S SEAL
PROVINCE OF MANITOBA
D.A. NEILSON
Member
37248
REGISTERED PROFESSIONAL ENGINEER

CONSULTANT FILE NAME
5170563 - SP04 - Sections 2.dwg

Winnipeg
THE CITY OF WINNIPEG
PUBLIC WORKS DEPARTMENT
ENGINEERING DIVISION

TACHE PROMENADE
SHEET PILE WALL

CORBEL AND SHEET PILE DETAILS 2

CITY DRAWING NUMBER: B250-17-22
SHEET 22 OF 70
DRAWING No. 06 REV 0

O:\Winnipeg\Proj\5170563\09. Drawing\05. Design\06. Sheets\Detailed Design\Sheet Pile wall\5170563 - SP04 - Sections 2.dwg Last Saved: 10/12/2017 3:23 PM by AHeppner Plotted: 10/12/2017 5:28 PM by Alex Heppner