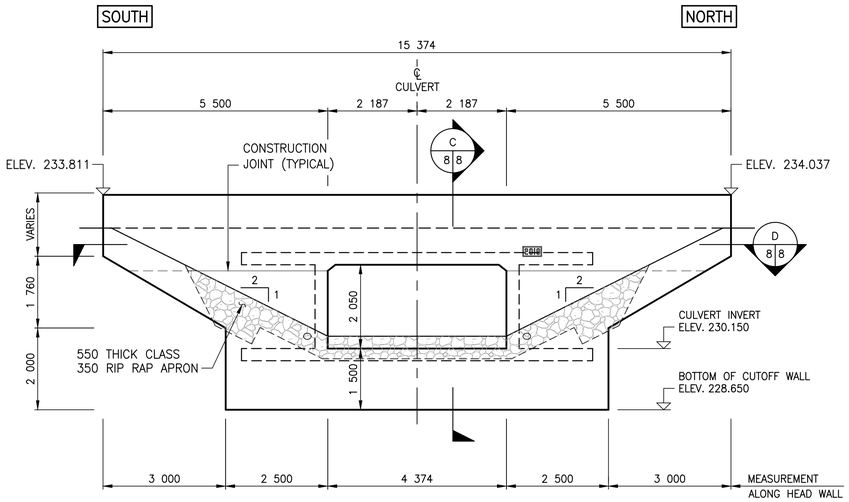

EAST HEAD WALL ELEVATION
SCALE 1:75

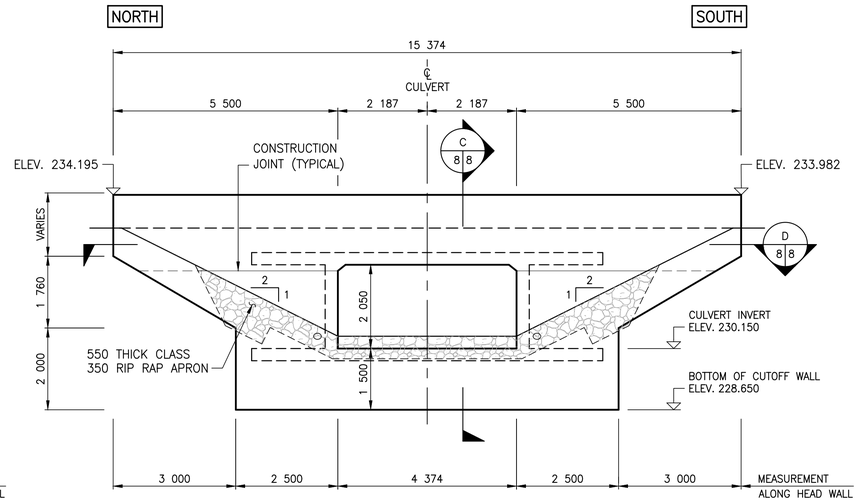

WEST HEAD WALL ELEVATION
SCALE 1:75

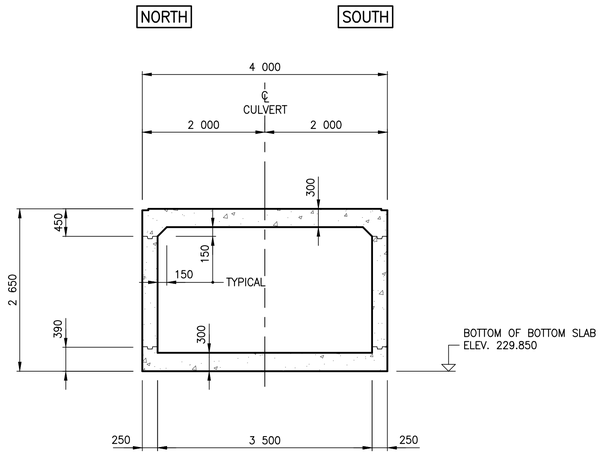

SECTION B 7 8
SCALE 1:50

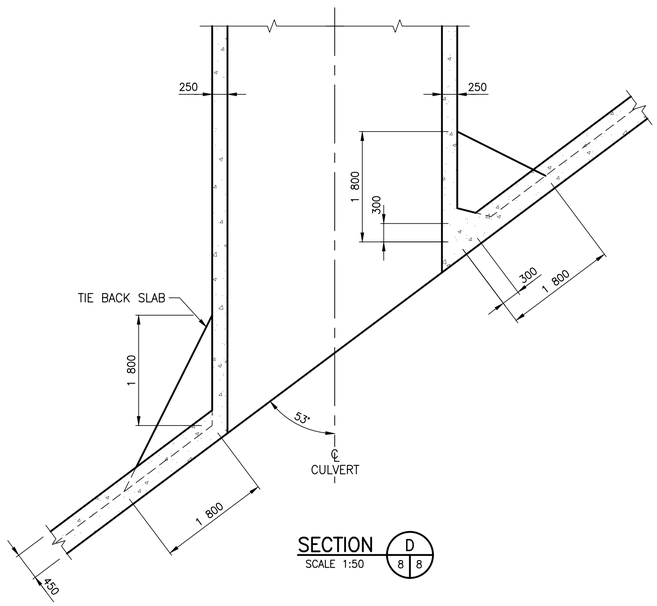

SECTION D 8 8
SCALE 1:50

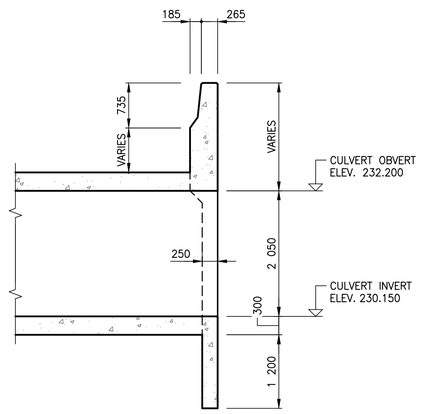

SECTION C 8 8
SCALE 1:50

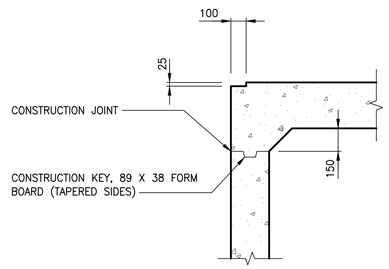

JOINT AT TOP OF WALLS

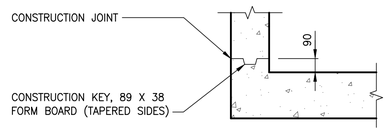

JOINT AT BOTTOM OF WALLS

DETAIL OF CONSTRUCTION JOINTS
SCALE 1:20

NOTE

1. FOR LOCATION OF SECTION B–B, SEE SHEET 7.

METRIC
WHOLE NUMBERS INDICATE MILLIMETRES
DECIMALIZED NUMBERS INDICATE METRES

NOTE:
These design documents are prepared solely for the use by the party with whom the design professional has entered into a contract and there are no representations of any kind made by the design professional to any party with whom the design professional has not entered into a contract.

ENGINEERS GEOSCIENTISTS MANITOBA
Certificate of Authorization
WSP Canada Group Limited
No. 6657

LOCATIONS APPROVED UNDERGROUND STRUCTURES

SIGNED BY: _____ DATE _____
SUPV U/G STRUCTURES

LOCATION OF UNDERGROUND STRUCTURES AS SHOWN ARE BASED ON THE BEST INFORMATION AVAILABLE BUT NO GUARANTEE IS GIVEN THAT ALL EXISTING UTILITIES ARE SHOWN OR THAT THE GIVEN LOCATIONS ARE EXACT CONFIRMATION OF EXISTANCE AND EXACT LOCATION OF ALL SERVICES MUST BE OBTAINED FROM THE INDIVIDUAL UTILITIES BEFORE PROCEEDING

G.B.M. = TOP NUT OF FIRST HYDRANT SOUTH OF INTERSECTION BETWEEN NESS AVENUE AND LINWOOD STREET
ELEV. = 233.659

No.	REVISIONS	DATE	BY
0	ISSUED FOR TENDER	17.11.23	JL

WSP Canada Group Limited
93 Lombard Avenue, Suite 111
Winnipeg MB R3B 3B1
T+ 1 204-943-3178
F+ 1 204-943-4948
www.wsp.com

DESIGNED BY	AG	CHECKED BY	MLW
DRAWN BY	FD	APPROVED BY	JL
HOR. SCALE	AS NOTED	RELEASED FOR CONSTRUCTION	
VERTICAL	AS NOTED		
DATE	17.11.23	DATE	

ENGINEER'S SEAL
PROVINCE OF MANITOBA
A. J. WATEFAR
Member 37456
REGISTERED PROFESSIONAL ENGINEER

CONSULTANT PROJECT No. 17M-00806-00

Winnipeg
THE CITY OF WINNIPEG
PUBLIC WORKS DEPARTMENT
ENGINEERING DIVISION

TRURO CREEK CULVERT REPLACEMENT AT LINWOOD STREET

CONCRETE DETAILS (SHEET 2 OF 2)

CITY DRAWING NUMBER C321-17-08
BID OPPORTUNITY NUMBER 1014-2017
SHEET 8 OF 19
REV 0

Plotted: November 24, 2017 at 10:35:20 AM | Last saved by: BernyK
File: P:\2017\17M-00806-00 – Truro Creek Culvert Replacements\MM Drawings\17M-00806-00 Truro Creek Culvert Replacements DD Linwood 07-11 concrete and reinforcing details.dwg | Layout: 8 Concrete Details (Sheet 2 of 2)
A1 SIZE (594 mm x 841 mm)