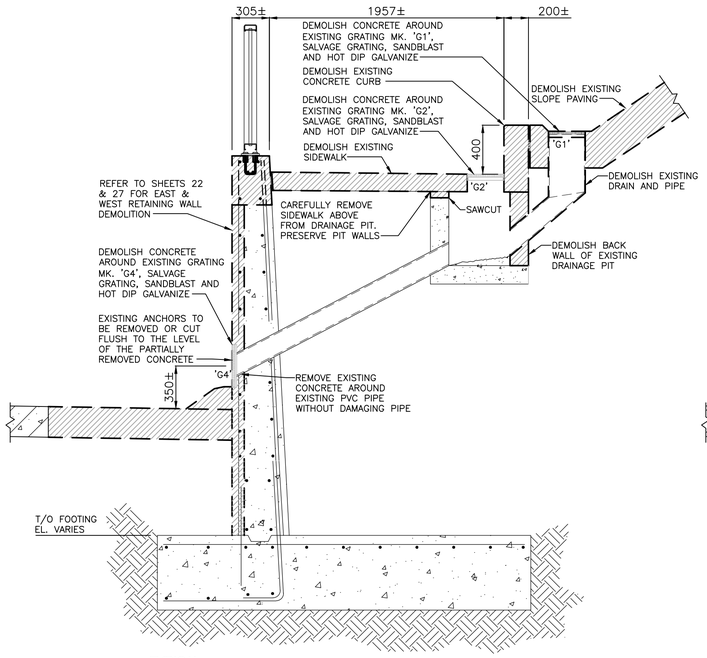


A 35 36 TYPICAL SECTION – DRAINAGE REMOVALS
1:25

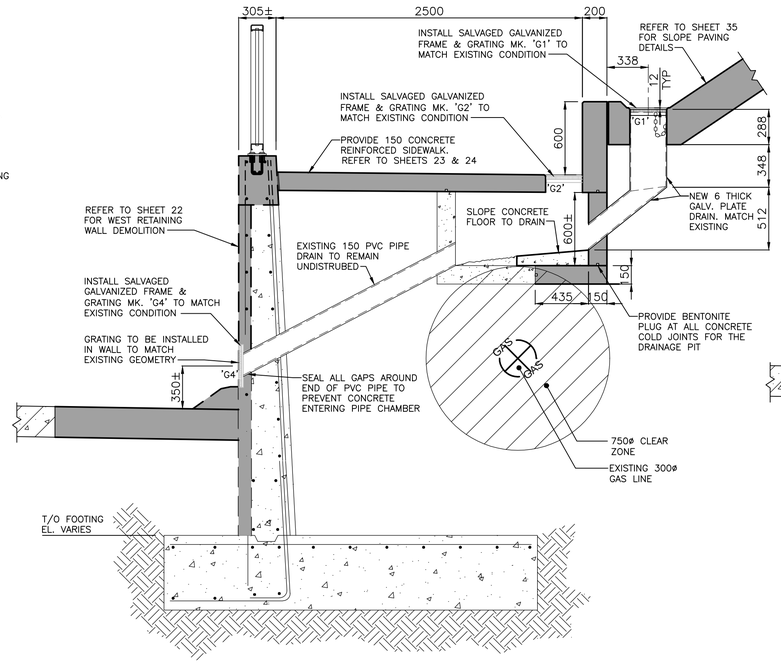


B 35 36 WEST SIDE SECTION – PROPOSED DRAINAGE
1:25

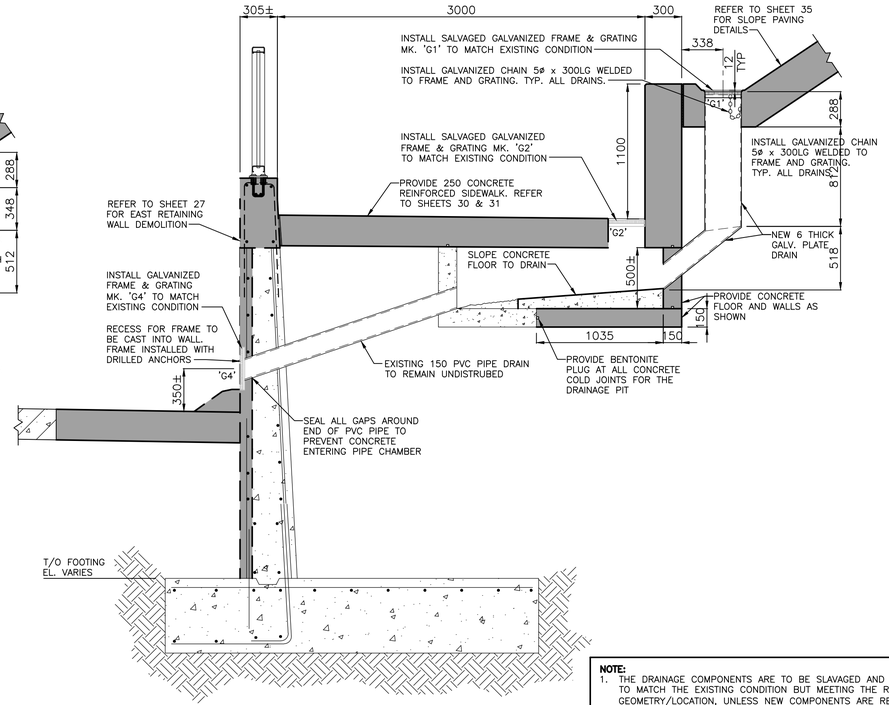


C 35 36 EAST SIDE SECTION – PROPOSED DRAINAGE
1:25

**NOTE:**
1. THE DRAINAGE COMPONENTS ARE TO BE SLAVAGED AND REINSTALLED TO MATCH THE EXISTING CONDITION BUT MEETING THE REVISED GEOMETRY/LOCATION, UNLESS NEW COMPONENTS ARE REQUIRED TO BE FABRICATED AND INSTALLED TO MEET THE REVISED GEOMETRY.
2. REFER TO DRAWINGS U205–85–12 AND U205–85–13 FOR EXISTING DRAINAGE DETAILS.
3. ALL SALVAGED STEEL DRAINAGE COMPONENTS THAT CAN BE REMOVED AND NEW COMPONENTS ARE TO BE HOT DIPPED GALVANIZED. ALL REMAINING COMPONENTS ARE TO BE METALIZED IN PLACE.
4. CONTRACTOR TO CONTACT MANITOBA HYDRO AS REQUIRED PRIOR TO ANY CUTTING OR DIGGING OPERATIONS THAT MAY INVOLVE THE CLEAR ZONE AROUND THE EXISTING GAS LINE

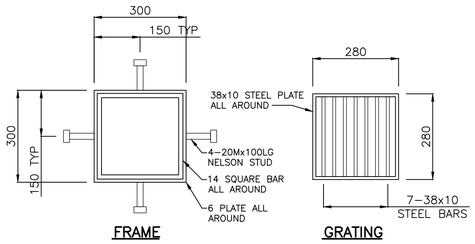


SALVAGED GRATING MK. 'G1'
1:10

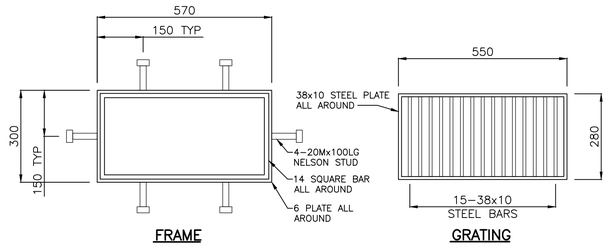


SALVAGED GRATING MK. 'G2'
1:10

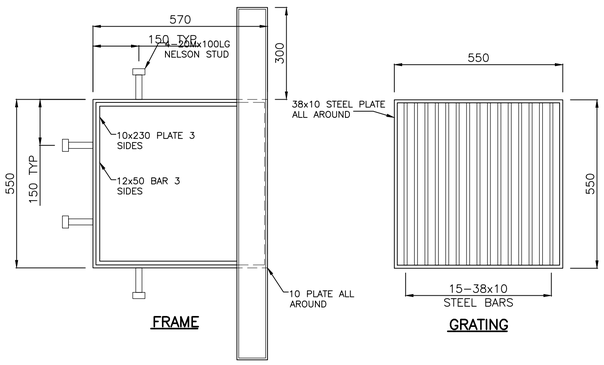


SALVAGED GRATING MK. 'G3'
1:10

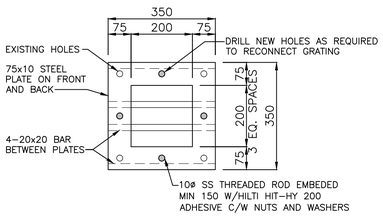


SALVAGED GRATING MK. 'G4'
1:10

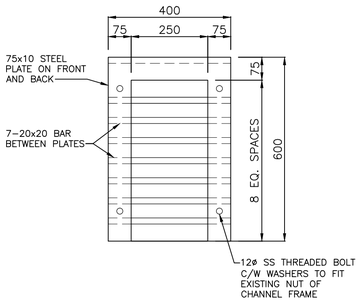


SALVAGED GRATING MK. 'G5'
1:10

LOCATION APPROVED
UNDERGROUND STRUCTURES

SUPV. U/G STRUCTURES COMMITTEE — DATE

NOTE:
LOCATION OF UNDERGROUND STRUCTURES AS SHOWN ARE BASED ON THE BEST INFORMATION AVAILABLE BUT NO GUARANTEE IS GIVEN THAT ALL EXISTING UTILITIES ARE SHOWN OR THAT THE GIVEN LOCATIONS ARE EXACT. CONFIRMATION OF EXISTENCE AND EXACT LOCATION OF ALL SERVICES MUST BE OBTAINED FROM THE INDIVIDUAL UTILITIES BEFORE PROCEEDING WITH CONSTRUCTION.

B.M. ELEV.

| NO. | REVISIONS | DATE | BY |
|---|---|---|---|
| 0 | ISSUED FOR TENDER | 16.07.04 | K.S.A. |

Stantec
500 - 311 Portage Avenue, Winnipeg MB Canada
www.stantec.com

| | | | |
|---|---|---|---|
| DESIGNED BY | S.Y. | CHECKED BY | K.S.A. |
| DRAWN BY | V.F. | APPROVED BY | B.J.W. |
| HOR. SCALE: VERTICAL: | AS NOTED | RELEASED FOR CONSTRUCTION: | |
| DATE | 2016.02.19 | DATE | |

ENGINEER'S SEAL

CONSULTANT DRAWING NO. S-120

Winnipeg
THE CITY OF WINNIPEG
PUBLIC WORKS DEPARTMENT
ENGINEERING DIVISION

2016 REGIONAL STREET PROGRAM
ARCHIBALD STREET
UNDERPASS REHABILITATION
UNDER BRIDGE DRAINAGE DETAILS

SHEET 36 OF 62
CAD FILE DRAWING NUMBER 06880s–119–884.dwg
CITY DRAWING NUMBER U205-16-36

Y:\1137\active\113706680\0300_drawing\0350_sheet_files\03_structural\06880s–119–884.dwg
Date: 2016 Jul 05 3:10pm Login: bernovats, James