NOTE:
NOT ALL SHELTERS REQUIRE ELECTRICAL SUPPLY

SEE SPECIFICATION FOR LOCATIONS

ELECTRICAL WIRES TO EXTEND 1.0 m ABOVE CONCRETE PAD

ELECTRICAL SUPPLY IS 120 VOLT 2.8 AMP, 60 CYCLE (BY OTHERS)

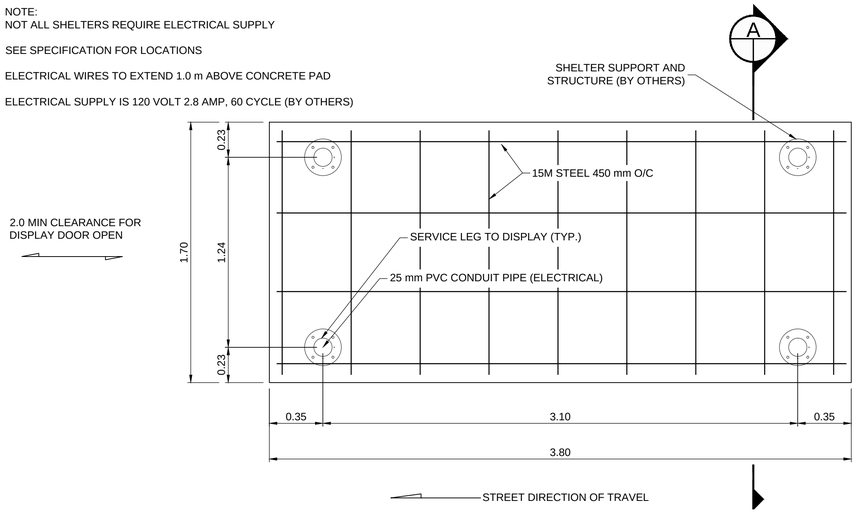

18 (CT-025, CT-028/###) TRANSIT SHELTER FOUNDATION PLAN
SCALE: 1:20

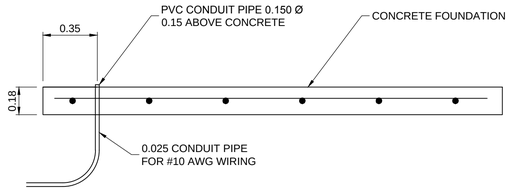

A TRANSIT SHELTER FOUNDATION SECTION
SCALE: 1:20

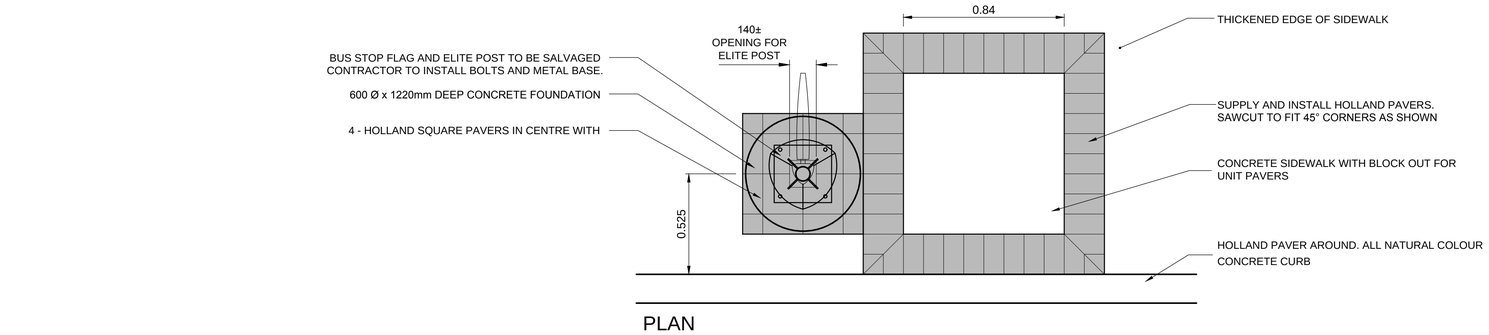

PLAN

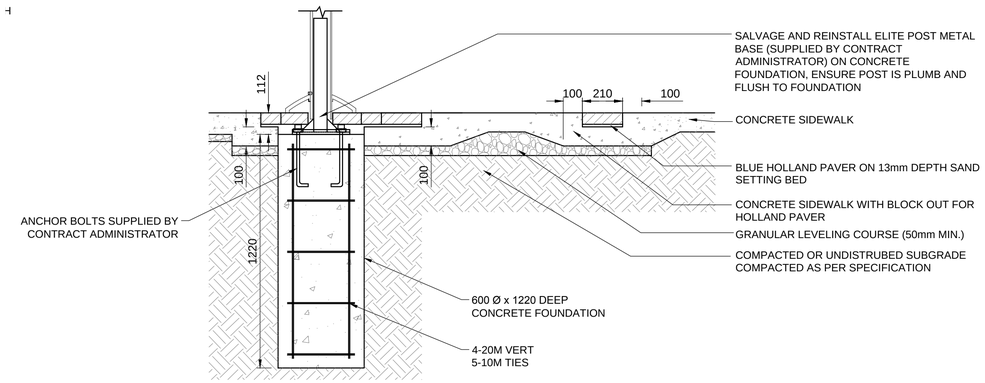

SECTION

20 (CT-057, CT-077) TRANSIT BUS STOP FLAG FOUNDATION AND STOP INDICATOR PAVERS
SCALE: NTS

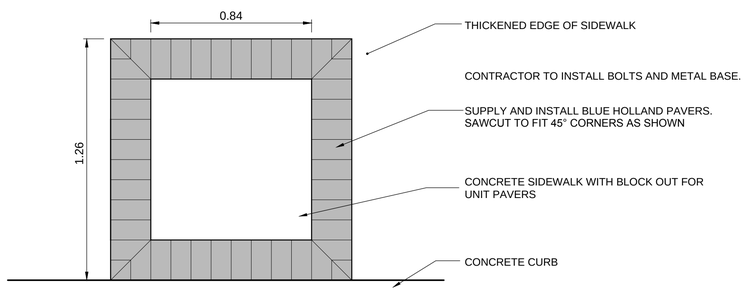

PLAN

21 (CT-055, CT-077) STOP INDICATOR PAVERS
025,028,034,039,040,042,043,05
SCALE: NTS

APEGM
Certificate of Authorization
Dillon Consulting Limited (MB)
No. 1789 Date: 17/01/09

UNDERGROUND STRUCTURES

SUPV. U/G STRUCTURES DATE

LOCATION OF UNDERGROUND STRUCTURES AS SHOWN ARE BASED ON THE BEST INFORMATION AVAILABLE, BUT NO GUARANTEE IS GIVEN THAT ALL EXISTING UTILITIES ARE SHOWN OR THAT THE GIVEN LOCATIONS ARE EXACT. CONFIRMATION OF EXISTENCE AND EXACT LOCATION OF ALL SERVICES MUST BE OBTAINED FROM THE INDIVIDUAL UTILITIES BEFORE PROCEEDING WITH CONSTRUCTION.

B.M. ELEV. SEE SHEET C2-CT-007 FOR CONTROL POINT INFORMATION

NO.	REVISIONS	DATE	BY
0	ISSUED FOR TENDER	17/01/09	DBW

DILLON CONSULTING

DESIGNED BY	RTP	CHECKED BY	DBW
DRAWN BY	RD	APPROVED BY	DBW
HOR. SCALE	AS NOTED	RELEASED FOR CONSTRUCTION	
VERTICAL	AS NOTED		
DATE		DATE	

ENGINEER'S SEAL
PROVINCE OF MANITOBA
D.B. WIEBE
Member
22480
REGISTERED PROFESSIONAL ENGINEER

CONSULTANT PROJECT NUMBER
16-3353

Winnipeg
THE CITY OF WINNIPEG
PUBLIC WORKS DEPARTMENT

WAVERLEY STREET UNDERPASS AT CN MILE 3.89 RIVERS SUB
CONTRACT 2: UNDERPASS STRUCTURES, RAILWORKS, ROADWORKS, LAND DRAINAGE SEWER, PUMPING STATION AND LANDSCAPING WORKS

DETAILS (3 OF 4)

CITY DRAWING NUMBER
U-239-2016-C2-CT-077

SHEET 077 OF 081

CONSULTANT DRAWING NUMBER
C2-CT-077

G:\CAD\163353\Technical Workspace\Engineering\Drawings and Figures\Roadworks\Contract\163353-C2-CON-CT-DETAILS.dwg