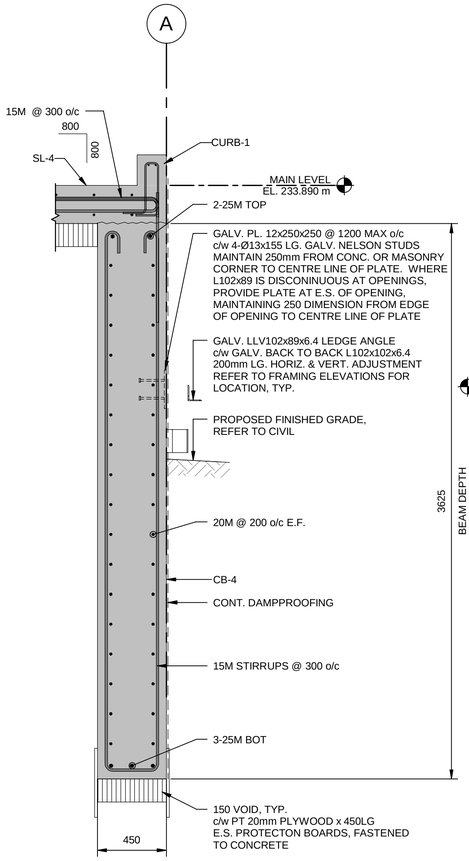

1 | CB-4 DETAIL

BS-402 | REF: BS-301 | SCALE: 1 : 20

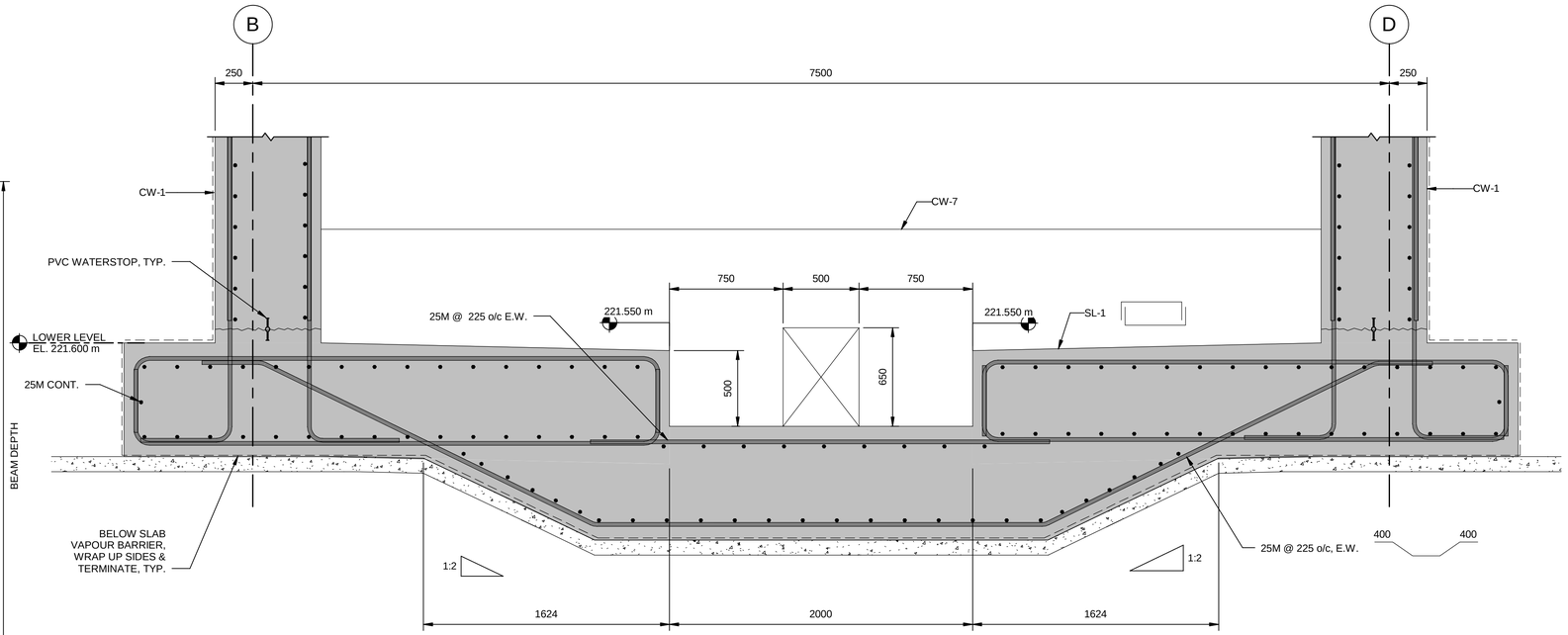

2 | SLAB PIT DETAIL

BS-402 | REF: BS-101 | SCALE: 1 : 20

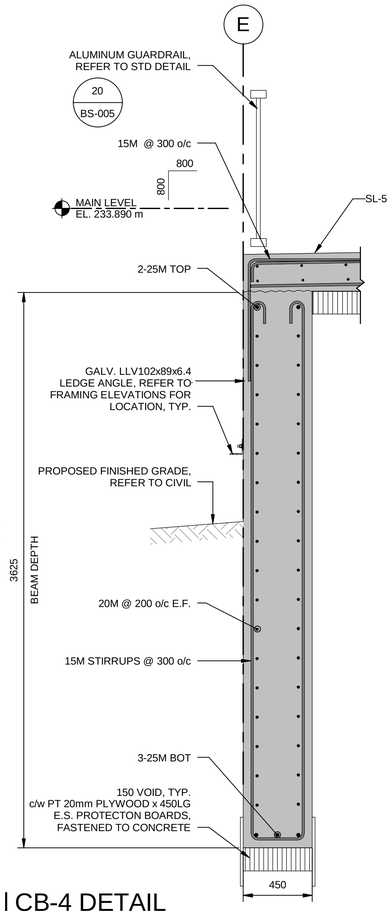

3 | CB-4 DETAIL

BS-402 | REF: BS-301 | SCALE: 1 : 20

NOTE:

1. EXCAVATION AND BACKFILL DETAILS NOT SHOWN FOR CLARITY

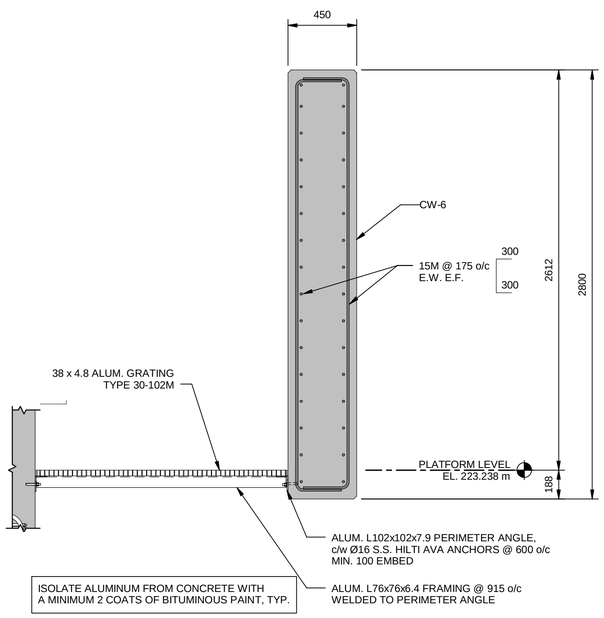

4 | CW-6 DETAIL

BS-402 | REF: BS-301 | SCALE: 1 : 20

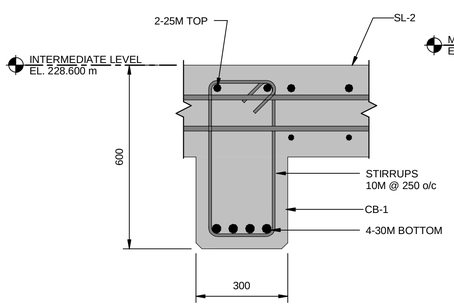

5 | CB-1 DETAIL

BS-402 | REF: BS-301 | SCALE: 1 : 10

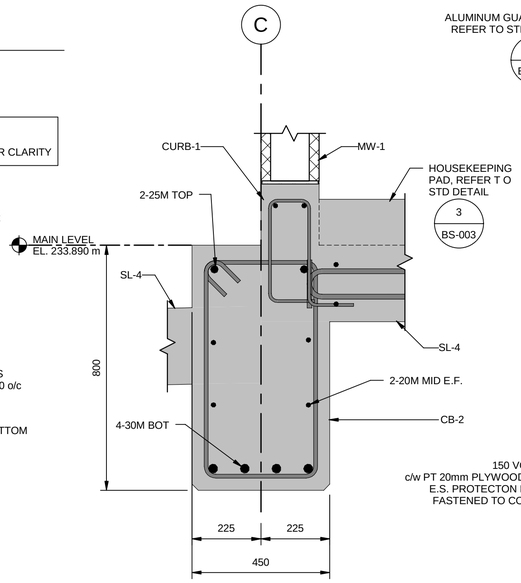

6 | CB-2 DETAIL

BS-402 | REF: BS-301 | SCALE: 1 : 10

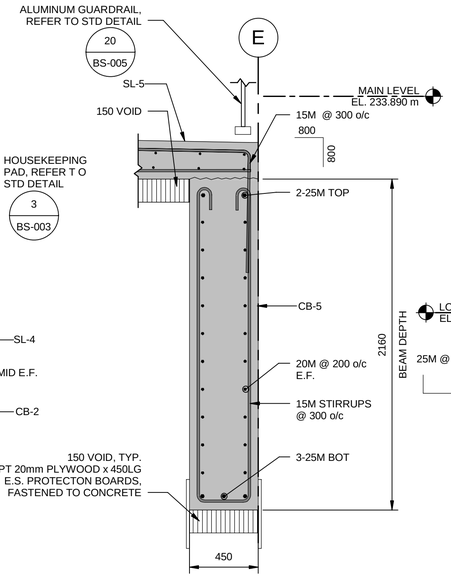

7 | CB-5 DETAIL

BS-402 | REF: BS-302 | SCALE: 1 : 20

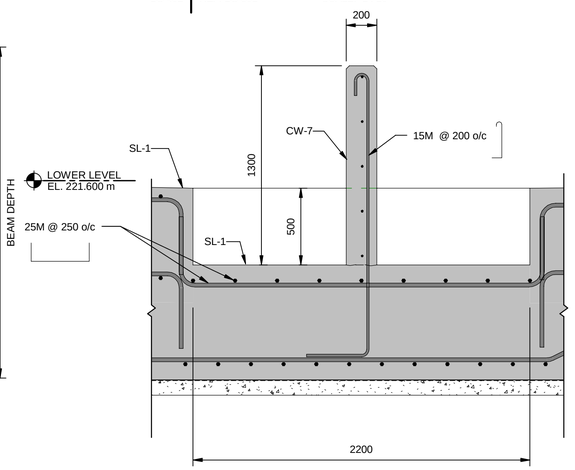

8 | CW-7 DETAIL

BS-402 | REF: BS-301 | SCALE: 1 : 20

METRIC

WHOLE NUMBERS INDICATE MILLIMETRES

DECIMALIZED NUMBERS INDICATE METRES

APEGM

Certificate of Authorization

AECOM Canada Ltd.

No. 4671 Date:_____

UNDERGROUND STRUCTURES

SUPV. U/G STRUCTURES | DATE

LOCATION OF UNDERGROUND STRUCTURES AS SHOWN ARE BASED ON THE BEST INFORMATION AVAILABLE. BUT NO GUARANTEE IS GIVEN THAT ALL EXISTING UTILITIES ARE SHOWN OR THAT THE GIVEN LOCATIONS ARE EXACT. CONFIRMATION OF EXISTENCE AND EXACT LOCATION OF ALL SERVICES MUST BE OBTAINED FROM THE INDIVIDUAL UTILITIES BEFORE PROCEEDING WITH CONSTRUCTION.

B.M. ELEV.

NO.	REVISIONS	DATE	BY
O	ISSUED FOR TENDER	17/01/09	KK

AECOM

DESIGNED BY	KK/JT	CHECKED BY	SBB
DRAWN BY	KK	APPROVED BY	AN
HOR. SCALE / VERTICAL	AS SHOWN	RELEASED FOR CONSTRUCTION	
DATE	06/01/2016	DATE	09/06/2016

ENGINEER'S SEAL

PROVINCE OF MANITOBA
J.A. THOMPSON
Member
30632
REGISTERED PROFESSIONAL ENGINEER

CONSULTANT PROJECT NUMBER

60321148

Winnipeg

THE CITY OF WINNIPEG
PUBLIC WORKS DEPARTMENT

WAVERLEY STREET UNDERPASS AT CN MILE 3.89 RIVERS SUB

CONTRACT 2: UNDERPASS STRUCTURE, RAILWORKS, ROADWORKS, LAND DRAINAGE SEWER, PUMPING STATION AND LANDSCAPING WORKS

PUMPING STATION

DETAILS

CITY DRAWING NUMBER: U-239-2016-C2- BS-402

SHEET 15 OF 16

CONSULTANT DRAWING NUMBER: C2-BS-402

P:\60321148\900-Work\910-CAD\99-SUPPORT\PROJECT_TITLE_BLOCKS\Title Block for Pump Station works\163353.XTB-C1-CU.dwg