Branch Panel: PNL-U70E

Location: CONTROL ROOM RM-M-121
Supply From: XFMR-U70E
Mounting: MCC BUILT-IN
Enclosure: Type 1

Volts: 120/208 Wye
Phases: 3
Wires: 4

A.I.C. Rating:
Mains Type:
Mains Rating: 225 A
MCB Rating: 225 A

Notes:

CKT	Circuit Description	Trip	Poles	A	B	C	Poles	Trip	Circuit Description	CKT
1	EXTERIOR RECEPTACLE	15 A	1				1	15 A	EXTERIOR LIGHTING	2
3	GENERATOR ROOM RECEPTACLES	15 A	1				1	15 A	CONTROL ROOM LIGHTING, EXIT & EMERG.	4
5	CONTROL ROOM RECEPTACLES	15 A	1				1	15 A	GENERATOR ROOM LIGHTING, EXIT & EMERG.	6
7	CHAMBER LIGHTING	15 A	1				1	15 A	GENERATOR BATTERY CHARGER	8
9	GENERATOR BLOCK HEATER	40 A	2				1	15 A	MAIN PLC CABINET	10
11	--	--	--				1	15 A	CONTROL PANEL	12
13	HEAT TRACE GFCI	15 A	2				1	15 A	ULTRASONIC LEVEL	14
15	--	--	--				1	15 A	SF-U-21 SUPPLY FAN GENERATOR ROOM	16
17	RECEPTACLE FOR MTS SERVICE	15 A	1							18
19										20
21										22
23										24
25										26
27										28
29										30
31										32
33										34
35										36
37										38
39	BRIDGE LIGHTING NOTE 1	15 A	1							40
41	BRIDGE LIGHTING NOTE 1	15 A	1							42

NOTES:
1. REFER TO DILLION CONSULTING DRAWINGS C2-CS-062 AND C2-CS-063.

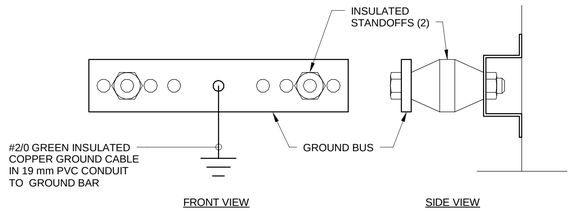

NOTES:

1. NEW COPPER GROUND BAR (1000x100x6 - EACH ELECTRICAL ROOM) WITH HOLES PREPUNCHED FOR DOUBLE BOLT CONNECTORS AND INSULATED STANDOFFS.
2. CONNECT NEW #2/0 GROUND CABLE.
3. GROUND CONNECTORS TO BE TAGGED ON BOTH ENDS IDENTIFYING LOCATION AND DEVICE.
4. GROUND CABLE TO BE INSTALLED ON SUPPORTS WHERE POSSIBLE. PROVIDE SUPPORTS WHERE NEEDED.

2 GROUNDING BAR DETAIL

BE-006 SCALE: N.T.S.

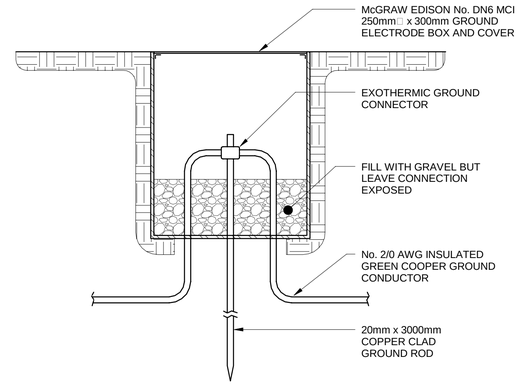

3 GROUND WELL DETAIL

BE-006 SCALE: N.T.S.

LUMINAIRE SCHEDULE

SYMBOL	LABEL	TYPE	VOLTS	LAMP	DESCRIPTION	MANUFACTORER CATALOG NUMBER	MOUNTING
	A	LED	120V		LONG LIFE LED FIXTURE WITH FIBERGLASS GASKETED HOUSING. MINIMUM 50000 HOURS, CUL LISTED.	METALUX: 4VT2-LD4-6-DR-UNV-L835-U COMPLETE SET WITH INSTALLATION KIT VT2-CHAIN/SET U ORACLE LIGHTING: 4-OW1IP-LED-6000L-DIM10-120-85-SSL-GSS 1	SURFACE MOUNTING
	B	LED	120V		SUITABLE FOR CLASS 1 ZONE 1 AND CATEGORY 1 ENVIRONMENT , cUL LISTED OR CSA CERTIFIED.	RIG-A-LITE: SXPJ10LUGGW1 EMERSON: CMLED-W-25-3-D-5-BU-G 1	WALL MOUNTING
	C	LED	120V	100W	INCLUDE VANDAL RESISTANCE PACKAGE AND PHOTOCELL	KEENE: SS3LED32704KUNVPCBP	WALL MOUNTING
EXIT	D	LED	120 TO 347V AC, 12V DC	6W MR16	CSA 22.2 No. 141-10 CERTIFIED PICTOGRAM EXIT SIGN WITH SOLID METAL CONSTRUCTION, ILLUMINATED BY LONG-LIFE WHITE LED AND TWIN EMERGENCY LED EMERGENCY LIGHTS, UNIVERSAL AC INPUT: TWO-WIRE 120 TO 347VAC, MAINTENANCE-FREE LEAD-CALCIUM BATTERY.	EMERGI-LITE: EAC1W12502LGUN	UNIVERSAL MOUNTING
	D1	LED	12VDC	6W MR16	CSA 22.2 No. 250 CERTIFIED REMOTE FIXTURES, WHITE COLOUR, MR16 LED LAMPS, WIRE TO D FIXTURE.	EMERGI-LITE: EF9DLG	WALL MOUNTING

HEATER SCHEDULE

TAG	LOCATION	MANUFACTURER	MODEL	HEATING CAPACITY, kW	VOLTS/Ph/Hz	THERMOSTAT
UH-U70E-01	CONTROL ROOM RM-M-121	CALORITECH	GE-05-8-T	5	600/3/60	INTEGRAL
UH-U70-02	GENERATOR ROOM RM-M-122	CALORITECH	GE-05-8-T	5	600/3/60	INTEGRAL
UH-U70-03	INTERMEDIATE LEVEL	RUFFNECK	FX5-600360-100-T	10	600/3/60	INTEGRAL
UH-U70-04	INTERMEDIATE LEVEL	RUFFNECK	FX5-600360-100-T	10	600/3/60	INTEGRAL

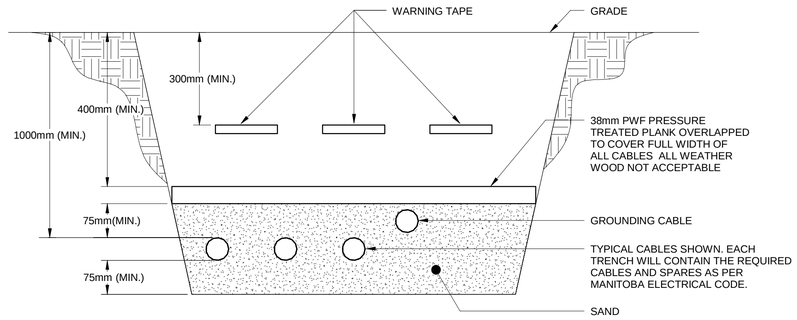

4 DIRECT BURIED TRENCH

BE-006 SCALE: N.T.S.

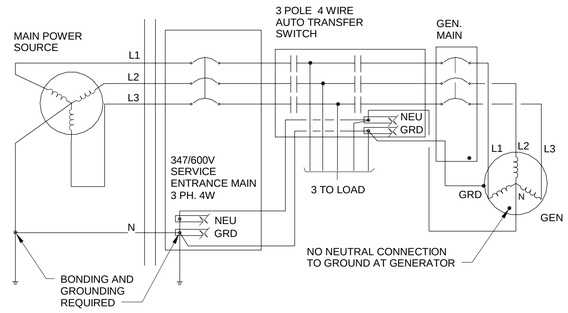

5 STANDBY GENERATOR GROUNDING

BE-006 SCALE: N.T.S.

APEGM
Certificate of Authorization
AECOM Canada Ltd.
No. 4671 Date:_____

METRIC
WHOLE NUMBERS INDICATE MILLIMETRES
DECIMALIZED NUMBERS INDICATE METRES

UNDERGROUND STRUCTURES

SUPV. U/G STRUCTURES DATE

LOCATION OF UNDERGROUND STRUCTURES AS SHOWN ARE BASED ON THE BEST INFORMATION AVAILABLE, BUT NO GUARANTEE IS GIVEN THAT ALL EXISTING UTILITIES ARE SHOWN OR THAT THE GIVEN LOCATIONS ARE EXACT. CONFIRMATION OF EXISTENCE AND EXACT LOCATION OF ALL SERVICES MUST BE OBTAINED FROM THE INDIVIDUAL UTILITIES BEFORE PROCEEDING WITH CONSTRUCTION.

B.M. ELEV.

NO.	REVISIONS	DATE	BY
1	ADDENDUM #5	17/03/01	RC
O	ISSUED FOR TENDER	17/01/09	RC

AECOM

DESIGNED BY	RB	CHECKED BY	LCS
DRAWN BY	RC	APPROVED BY	SS
HOR. SCALE / VERTICAL	AS SHOWN	RELEASED FOR CONSTRUCTION	
DATE	06/01/2016	DATE	05/30/16

ENGINEER'S SEAL: PROVINCE OF MANITOBA R. BOGDANOV Member 33564 REGISTERED PROFESSIONAL ENGINEER

CONSULTANT PROJECT NUMBER 60321148

Winnipeg

THE CITY OF WINNIPEG
PUBLIC WORKS DEPARTMENT

WAVERLEY STREET UNDERPASS AT CN MILE 3.89 RIVERS SUB
CONTRACT 2: UNDERPASS STRUCTURE, RAILWORKS, ROADWORKS, LAND DRAINAGE SEWER, PUMPING STATION AND LANDSCAPING WORKS

PUMPING STATION
SCHEDULES AND DETAILS

CITY DRAWING NUMBER: U-239-2016-C2-BE-006
SHEET 6 OF 8
CONSULTANT DRAWING NUMBER: C2-BE-006

P:\60321148\900-Work\910-CAD\99-SUPPORT\PROJECT_TITLE_BLOCKS\Title Block for Pump Station works\163353-XTB-C1-CU.dwg