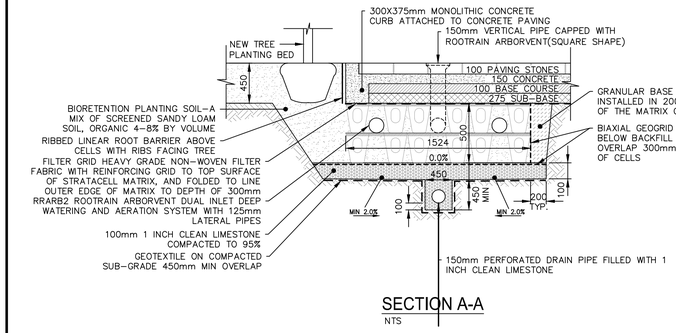

SECTION A-A
NTS

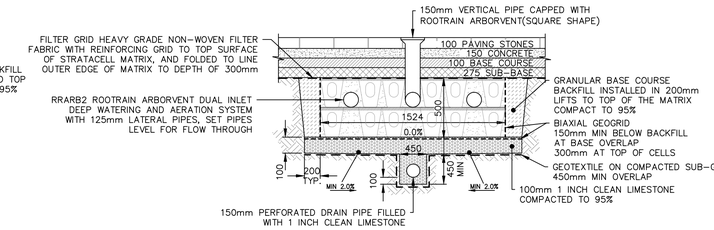

SECTION B-B
NTS

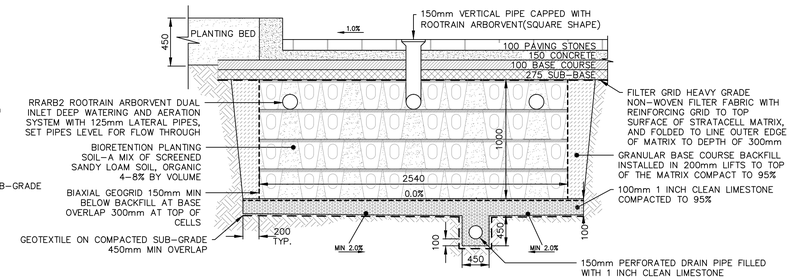

SECTION C-C
NTS

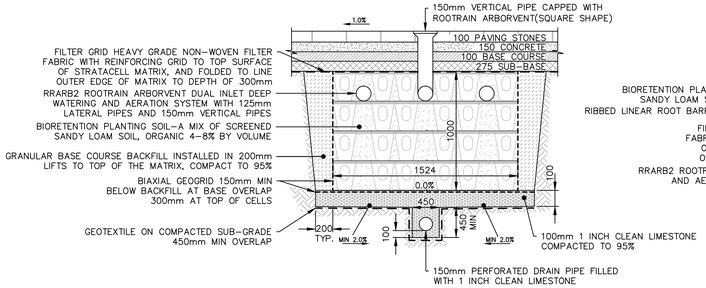

SECTION D-D
NTS

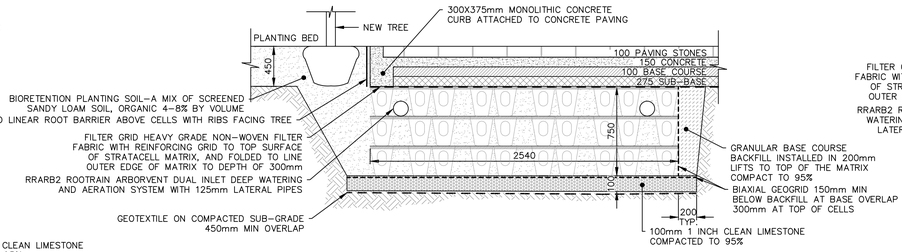

SECTION E-E
NTS

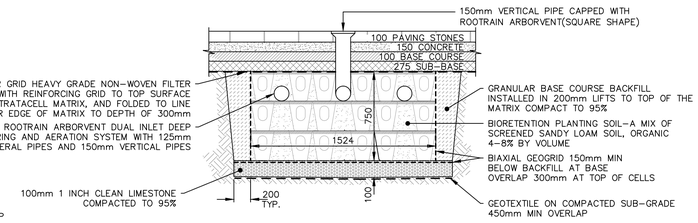

SECTION F-F
NTS

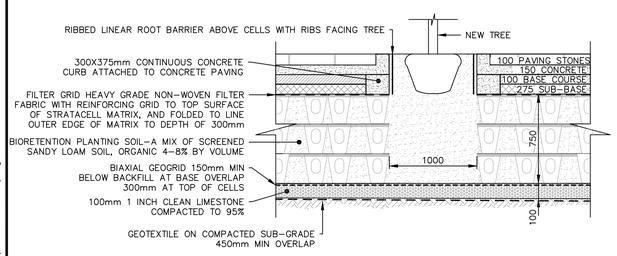

SECTION G-G
NTS

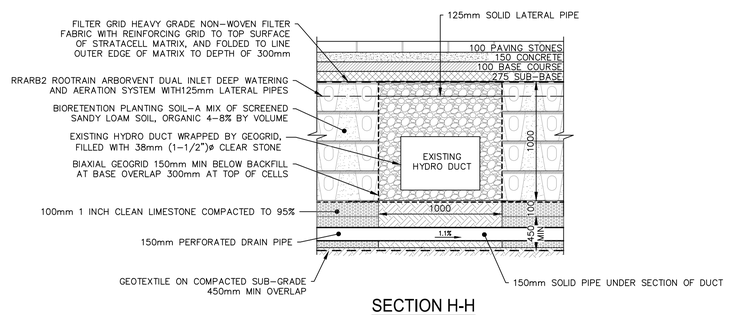

SECTION H-H
NTS

METRIC

WHOLE NUMBERS INDICATE MILLIMETRES
DECIMALIZED NUMBERS INDICATE METRES

APEGM
Certificate of Authorization
MMM Group Limited
No. 4531

NOTE:
These design documents are prepared solely for the use by the party with whom the design professional has entered into a contract and there are no representations of any kind made by the design professional to any party with whom the design professional has not entered into a contract.

EXISTING	LEGEND-PLAN	PROPOSED	EXISTING	LEGEND-PLAN	PROPOSED	EXISTING	LEGEND-PROFILE	PROPOSED
	WATERMAIN			HYDRANT				
	LAND DRAINAGE SEWER			VALVE				
	WASTE WATER SEWER			CURB STOP				
	HYDRO		230.99	GROUND GRADE				
	M.T.S.		(30.99)	PAVEMENT GRADE	31.00			
	GAS			ANCHOR				
	SIGNALS			ORNAMENT LIGHT				
	MANHOLE			HYDRO POLE				
	CATCH BASIN			CURB RAMP				
	CURB INLET			EDGE OF SIDEWALK			ROADWAY CENTRE LINE	
	UTILITIES ADJUST			PROPERTY LINE			WEST GUTTER	
	CLEANOUT			BARRIER CURB			EAST GUTTER	
	ROOTRAIN ARBORVENT			BARRIER CURB & GUTTER			SIDEWALK	
	PLUG			PAVING STONES			PROPERTY/BUILDING LINE	

LOCATIONS APPROVED UNDERGROUND STRUCTURES

SIGNED BY: _____
SUPV U/G STRUCTURES DATE

LOCATION OF UNDERGROUND STRUCTURES AS SHOWN ARE BASED ON THE BEST INFORMATION AVAILABLE BUT NO GUARANTEE IS GIVEN THAT ALL EXISTING UTILITIES ARE SHOWN OR THAT THE GIVEN LOCATIONS ARE EXACT CONFIRMATION OF EXISTANCE AND EXACT LOCATION OF ALL SERVICES MUST BE OBTAINED FROM THE INDIVIDUAL UTILITIES BEFORE PROCEEDING

G.B.M. -
ELEV. 232.205
"O" IN OPEN ON FIREHYDRANT LOCATED AT THE SOUTHEAST CORNER OF RORIE STREET AND MARKET AVENUE.

NO.	REVISIONS	DATE	BY
3	ISSUED FOR TENDER	05/25/16	JZ
2	ISSUED TO U/G STRUCTURES REVIEW	04/08/16	JZ
1	ISSUED FOR CITY OF WINNIPEG REVIEW	03/18/16	JZ

MMM GROUP
MMM Group Limited.
Suite 111 - 93 Lombard Ave.
Winnipeg, MB R3B 3B1
t. 204.943.3178
f. 204.943.4948
www.mmm.ca

DESIGNED BY	JZ	CHECKED BY	RMB
DRAWN BY	RA	APPROVED BY	VM
HOR. SCALE	1:250	RELEASED FOR CONSTRUCTION	
VERTICAL	1:10		
DATE	03/15/16	DATE	

ENGINEER'S SEAL
PROVINCE OF MANITOBA
JIAYUAN ZHANG
Member
34326
REGISTERED PROFESSIONAL ENGINEER

CONSULTANT ACAD DWG. NO.
5515038-C06

Winnipeg

THE CITY OF WINNIPEG
PUBLIC WORKS DEPARTMENT
TRANSPORTATION DIVISION

NORTH EAST EXCHANGE DISTRICT ENGINEERING STUDY
STREET RENEWALS
RECONSTRUCTION

JOHN HIRSCH PLACE
STRATA CELL DETAILS

CITY DRAWING NUMBER
SHEET 6 OF 39

BID NO.
345-2016

May 25, 2016 – 11:23am
P:\5515001-5515099\5515038 – 2015 NE Exchange\MMM Drawings\5515038-C06– Strata Cell Details (John Hirsch Place).dwg –tab:C06