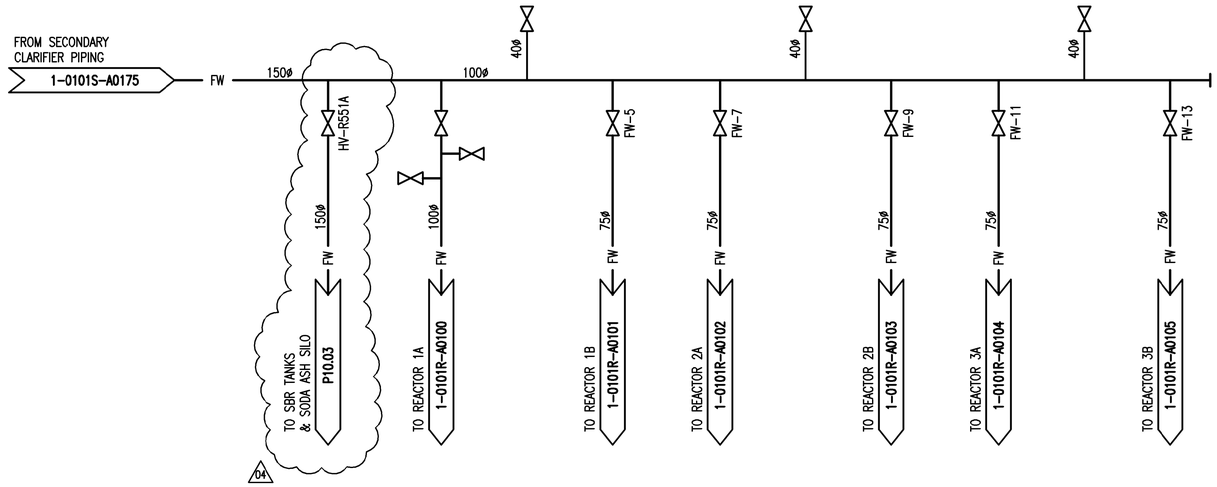

FLUSHING WATER PIPING

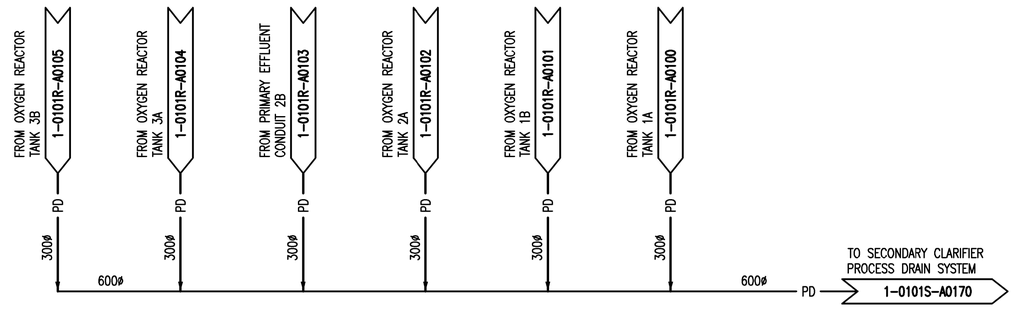

PROCESS DRAIN PIPING

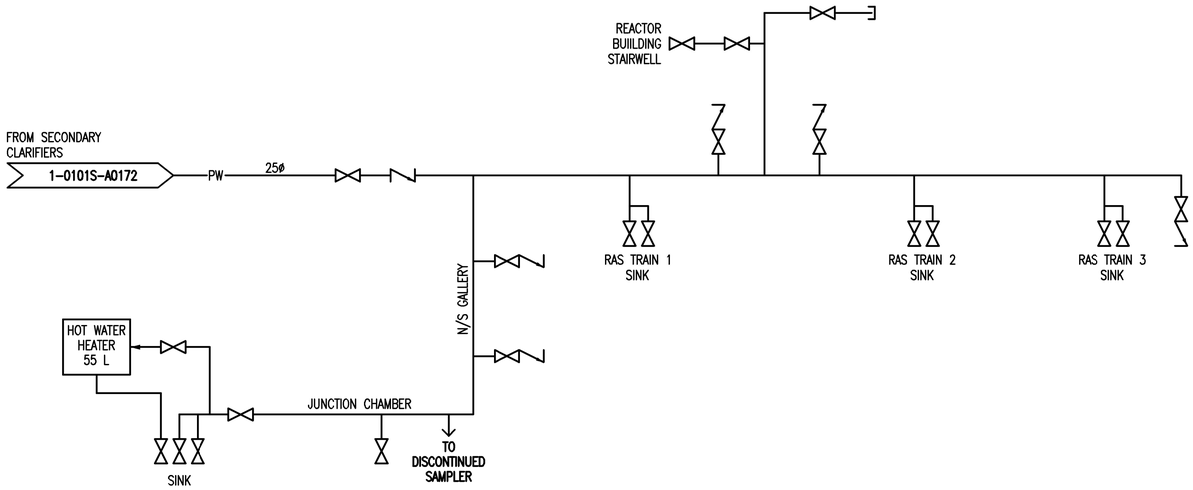

POTABLE WATER PIPING

REVISION 04 CHANGES THE ENGINEER'S DESIGN RESPONSIBILITIES ARE LIMITED TO THE CHANGES INDICATED IN THE CLOUDED WORK	
DESIGNED BY: CGL	CHECKED BY: KJS
DRAWN BY: SRG	APPROVED BY: KJS
DATE: –	RELEASED FOR CONSTR. DATE: –

1-0101A-A0001	PROCESS AND INSTRUMENT DIAGRAMS LEGEND AND DETAILS
DRAWING NUMBER	REFERENCE DRAWINGS

APEGM
Certificate of Authorization
AECOM Canada Ltd.
No. 4671 Date: April 6/16

B.M. ELEV. | FIELD BOOK #:

POSTED TO LBIS

NO.	REVISIONS	DATE	BY
04	ISSUED FOR TENDER: BID OP 145-2016	2016/04/06	SRG
03	DWG WAS 1-0101R-G-A0115	2005/10/06	CJR
02	RENUMBERED FACILITY CODE	2005/10/06	CJR
01	ISSUED FOR C.O.W. USE	2005/09/15	CJR
00	RELEASED FOR CUSTOMER REVIEW.	2004/11/23	CJR

SNC • LAVALIN Engineers & Constructors
SNC • LAVALIN 200–1600 Ness Avenue Winnipeg, Manitoba Canada R3J 3W7

DESIGNED BY	EXISTING	CHECKED BY	CJR
DRAWN BY	KM	APPROVED BY	EMR
HOR. SCALE	NTS	RELEASED FOR CONSTRUCTION	
VERTICAL			
DATE	2004/09/08	DATE	

FILENAME: 1-0101R-A0115-001.dwg

ENGINEER'S SEAL
PROVINCE OF MANITOBA
April 6/16
K.J. SEARS
REGISTERED PROFESSIONAL ENGINEER

Winnipeg THE CITY OF WINNIPEG WATER AND WASTE DEPARTMENT

NORTH END WATER POLLUTION CONTROL CENTRE
OXYGEN REACTORS
PROCESS & INSTRUMENTATION DIAGRAM
FLUSHING WATER, PROCESS DRAIN, & POTABLE WATER PIPING

CITY DRAWING NUMBER	SHEET	REV.	SIZE
1-0101R-A0115	001	04	D

A1 SIZE – 594 x 841 mm

LAST SAVE: 2016/04/05 – 3:31pm
PATH: P:\60338393\900-Work\910-CAD\20-SHEETS\D\1-0101R-A0115-001.dwg