A1 SIZE – 594mm x 841mm

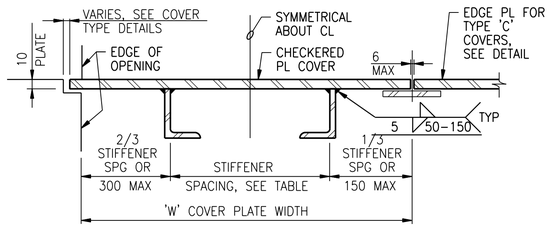

TABLE			
OPENING SPAN LENGTH 'L'	STIFFENER SIZE	MAX STIFFENER SPACING	MAX PLATE WIDTH 'W'
L<750	NONE	–	1500
750<L<1050	L51x38x6.4	450	1200
1050<L<1200	L64x38x6.4	450	1200
1200<L<1350	L64x38x6.4	375	1200
1350<L<1500	L76x51x6.4	450	1200
1500<L<1650	L76x51x6.4	375	900
1650<L<1800	L89x64x6.4	450	900
1800<L<1950	L89x64x6.4	375	750
1950<L<2100	L102x76x6.4	375	750
2100<L<2250	L102x76x6.4	300	600

NOTES:

1. STIFFENERS TO BE PLACED LONG LEG VERTICAL.
2. SPAN DIRECTION OF PLATE TO BE PARALLEL TO STIFFENERS, AND SHALL BE SHORT DIMENSION OF OPENING UNLESS NOTED OTHERWISE ON PLANS.
3. MAXIMUM ALLOWABLE UNIFORM DESIGN LOAD = 15 kPa.
4. MAXIMUM WEIGHT OF COVER PLATE TO BE 55 kg.
5. COVER PLATES AND STIFFENERS ARE ALUMINUM PLATES AND ANGLES.
6. ALL COVER PLATES TO HAVE A MINIMUM OF TWO EYES AS SHOWN IN LIFTING EYE DETAILS, EXCEPT AT COVER PLATES ABOVE STOP LOGS OR GATES.

COVER STIFFENERS

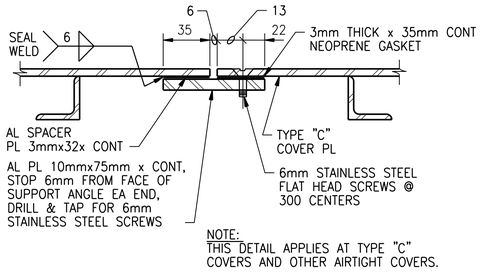

EDGE PLATE DETAIL

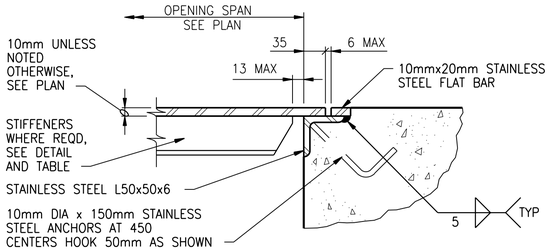

COVER TYPE "A"

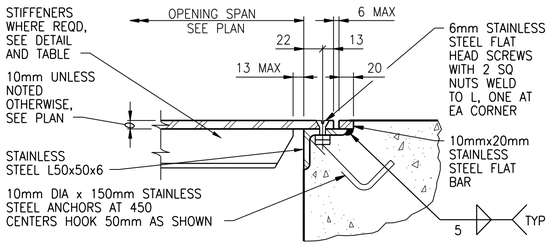

COVER TYPE "B"

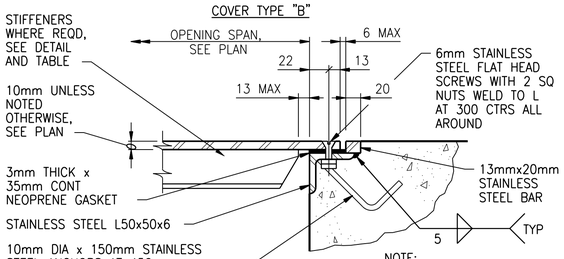

NOTE:
THIS DETAIL APPLIES AT OPENINGS THAT REQUIRE AIR TIGHT COVERS.

COVER TYPE "C"

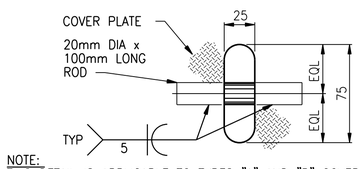

NOTE:
THIS DETAIL IS APPLICABLE TO TYPES "A" AND "B" COVERS AND OTHER COVERS NOT INTENDED TO BE AIRTIGHT.

LIFTING EYE TYPE "A"

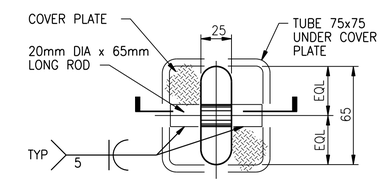

PLAN

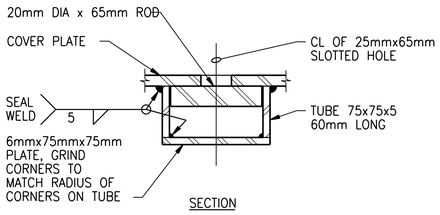

SECTION

NOTE:
THE DETAIL IS APPLICABLE TO TYPE "C" COVERS AND OTHER AIR TIGHT COVERS.

LIFTING EYE TYPE "B"

CHECKERED FLOOR PLATE – ALUMINUM

NTS

(0554-001)

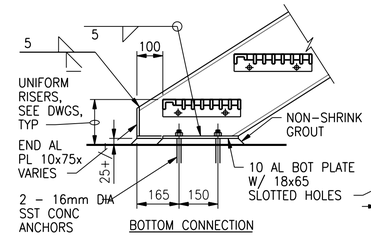

BOTTOM CONNECTION

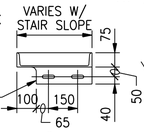

PLAN

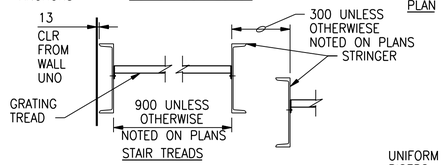

STAIR TREADS

STAIRWAY WIDTH	TREAD BEARING BARS ALUMINUM TREAD
685 OR LESS	25mm x 5mm
840 OR LESS	30mm x 5mm
990 OR LESS	40mm x 5mm
1400 OR LESS	45mm x 5mm

NOTES:

1. PROVIDE PROTECTION FOR DISSIMILAR METALS AND CONCRETE AS SPECIFIED.
2. AMERICAN STANDARD C304.8x15.2 kg/m ALUMINUM STRINGERS TYPICAL EXCEPT WHERE OTHERWISE NOTED ON PLANS.
3. STAIR HANDRAIL NOT SHOWN.
4. STAIR MANUFACTURER TO COORDINATE BOLTED TREADS AND HANDRAIL CONNECTIONS.
5. ALL FASTENERS SHALL BE STAINLESS STEEL.
6. FIELD VERIFY DIMENSIONS & ELEVATIONS PRIOR TO FABRICATION.

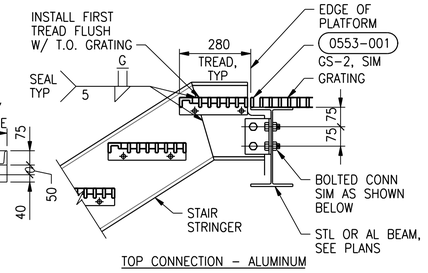

TOP CONNECTION – ALUMINUM

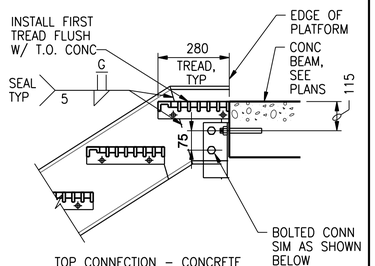

TOP CONNECTION – CONCRETE

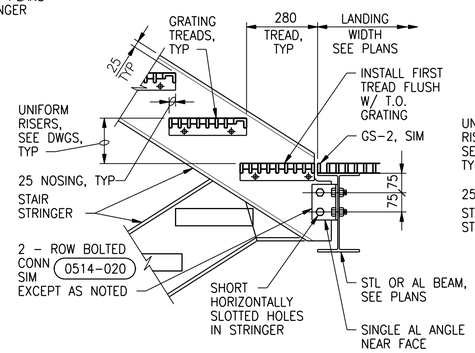

LANDING CONNECTION – ALUMINUM

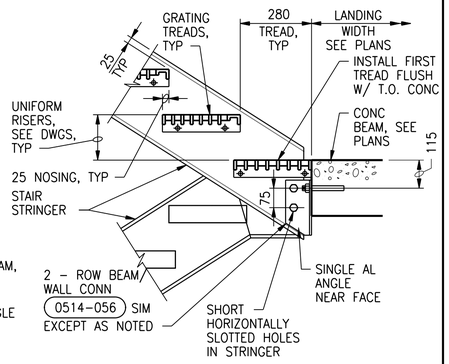

LANDING CONNECTION – CONCRETE

STAIR DETAILS – ALUMINUM

NTS

(0551-801)

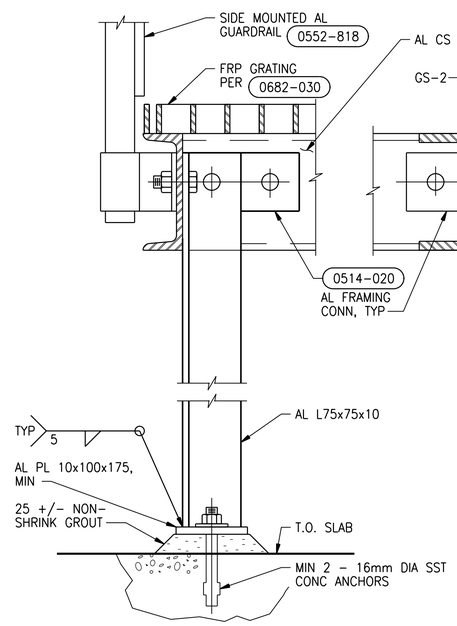

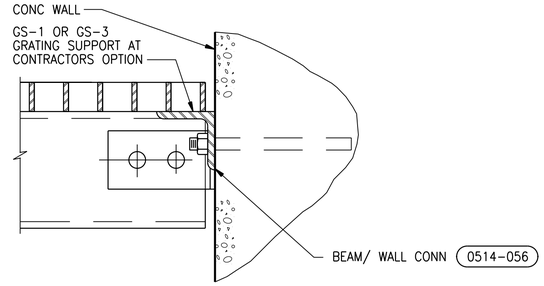

EQUIPMENT PLATFORM NOTES:

1. PROVIDE PROTECTION FOR DISSIMILAR MATERIALS AS SPECIFIED.
2. REFER TO SPECIFICATION SECTION 05500 FOR ADDITIONAL REQUIREMENTS AND SUBMITTAL INFORMATION.
3. PROVIDE DIAGONAL BRACING AS INDICATED.
4. ALL BOLTED CONNECTIONS SHALL BE 2 – BOLT MINIMUM.

TYPICAL EQUIPMENT PLATFORM – ALUMINUM

NTS

(0551-201)

©CH2M HILL 2015. ALL RIGHTS RESERVED.

APEGM
Certificate of Authorization
CH2M HILL Canada Ltd.
No. 1441

NO.	REVISIONS	DATE	DESIGN	CHECK
00	ISSUED FOR TENDER	08/2015	G.O.	J.C.

CH2MHILL. KGS GROUP SNC·LAVALIN

DESIGNED BY: E. LUI	CHECKED BY: R. PARIKH
DRAWN BY: G.OMORI	APPROVED BY: E. LUI
SCALE: NTS	ISSUED FOR CONSTRUCTION BY: T. TURZAK
DATE: 2015/08/13	DATE: 2015/08/13
CONSULTANT NO.: 474248	

ENGINEER'S SEAL
13 August 2015
PROVINCE OF MANITOBA
S.L.E. LUI
Member 37003
REGISTERED PROFESSIONAL ENGINEER

Winnipeg
THE CITY OF WINNIPEG
WATER AND WASTE DEPARTMENT

SOUTH END WATER POLLUTION CONTROL CENTRE
SEWPCC UPGRADING/EXPANSION PROJECT
STRUCTURAL
STANDARD DETAILS (10)

CITY DRAWING NUMBER	SHEET	REV.	SIZE
1-0102-SDTL-A011		00	A1

PLOT DATE: 2015\08\12
FILE NAME: 1-0102-SDTL-A011.dgn