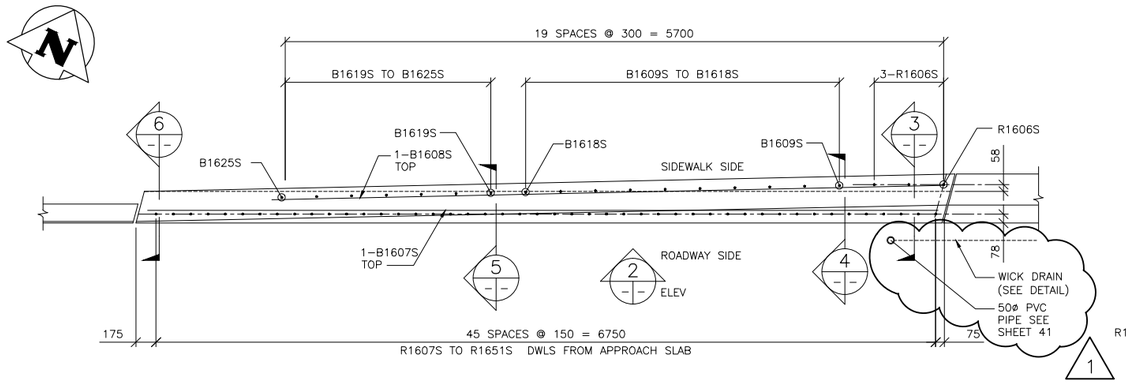

1 TRANSITION BARRIER
1 : 25
- NORTH WEST TRANSITION BARRIER SHOWN
- NORTH EAST, SOUTH WEST AND SOUTH EAST SIMILAR
- 4 LOCATIONS TOTAL

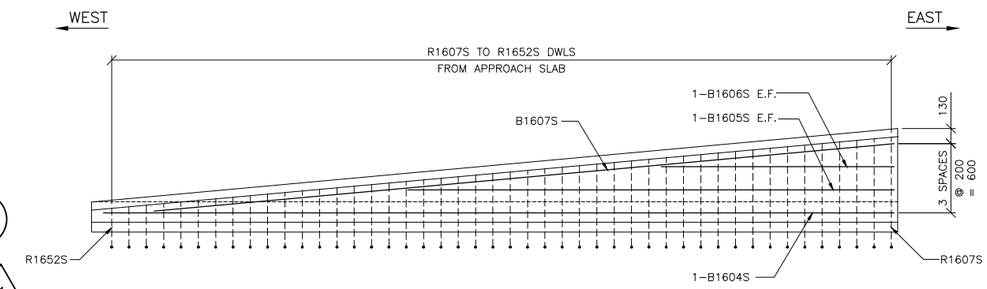

2 ELEVATION - TRANSITION BARRIER
1 : 25

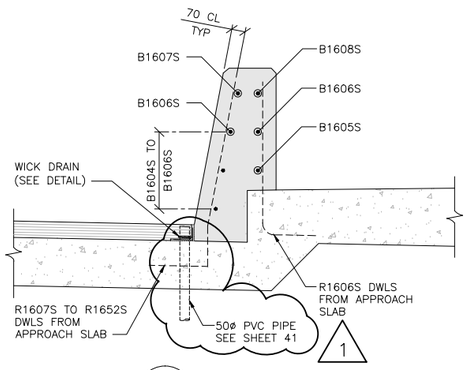

3 SECTION
1 : 15

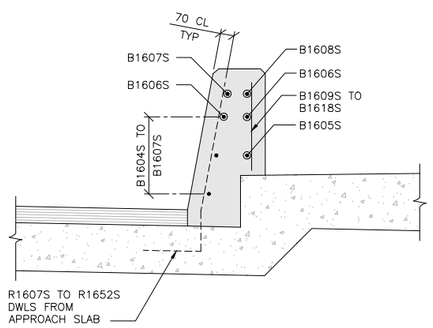

4 SECTION
1 : 15

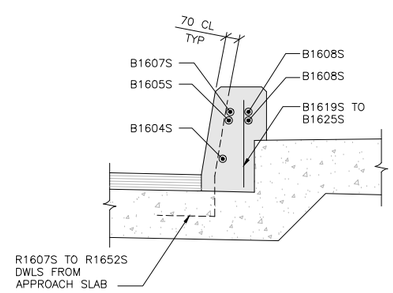

5 SECTION
1 : 15

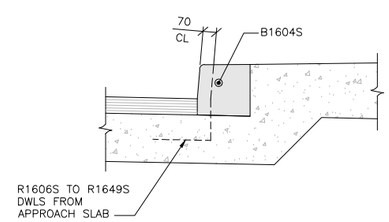

6 SECTION
1 : 15

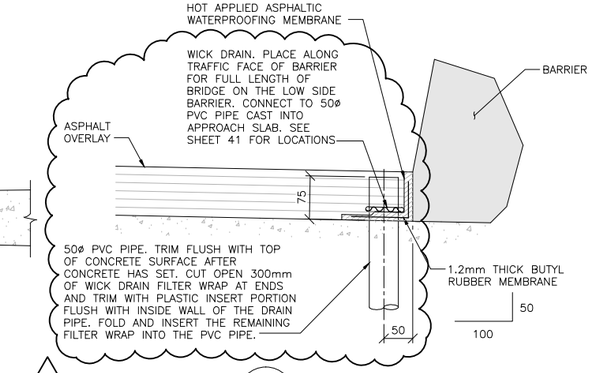

7 WICK DRAIN DETAIL
1 : 5

APEGM
Certificate of Authorization
TETRA TECH WEI Inc.
No. 5313 Date: April 30, 2016

B.M.
ELEV.

NO.	REVISIONS	DATE	BY
1	ISSUED FOR ADDENDUM 1	15.10.08	D.M.
0	ISSUED FOR TENDER	15.09.24	S.A.

TETRA TECH

DESIGNED BY D.M.
CHECKED BY S.A.
DRAWN BY G.I.
APPROVED BY E.F.S.
HOR. SCALE: AS NOTED
VERTICAL:
DATE 15.09.24
ACCEPTED BY DATE
ORIGINAL DRAWING SIGNED BY: D.N. BURMEY, P.ENG. 15.09.24
D.N. BURMEY, P.ENG.
BRIDGE PROJECTS ENGINEER

S.Y.I. AWAD
ORIGINAL SIGNED
15.09.24
31981

CONSULTANT DRAWING NO.
1400070800-DWG-S0037

Winnipeg
THE CITY OF WINNIPEG
PUBLIC WORKS DEPARTMENT
ENGINEERING DIVISION

NESS AVENUE AT STURGEON CREEK
BRIDGE CONSTRUCTION

CITY DRAWING NUMBER
B243-15-037
SHEET 37 OF 64

TRANSITION BARRIER
REINFORCING DETAILS

37