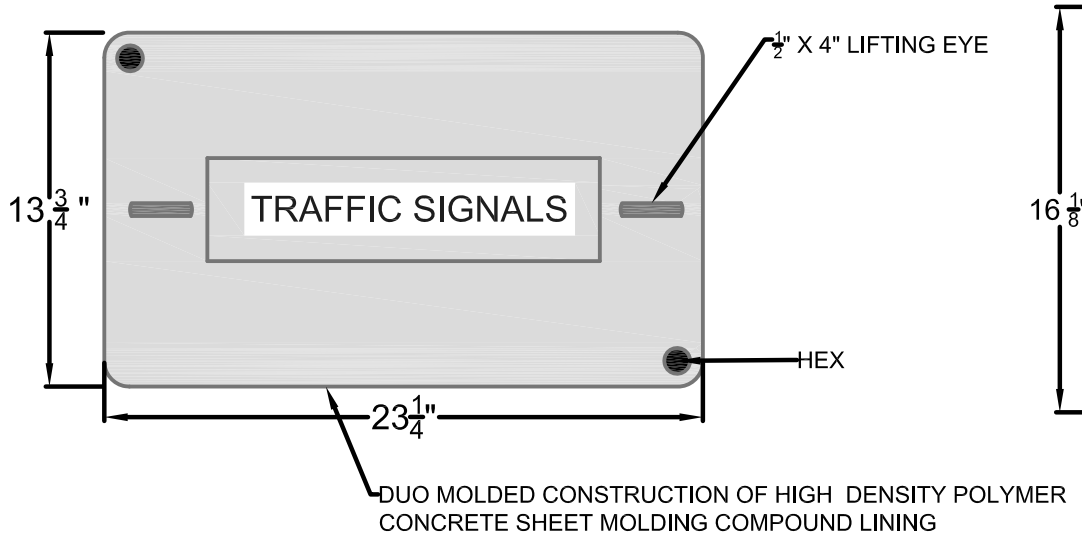

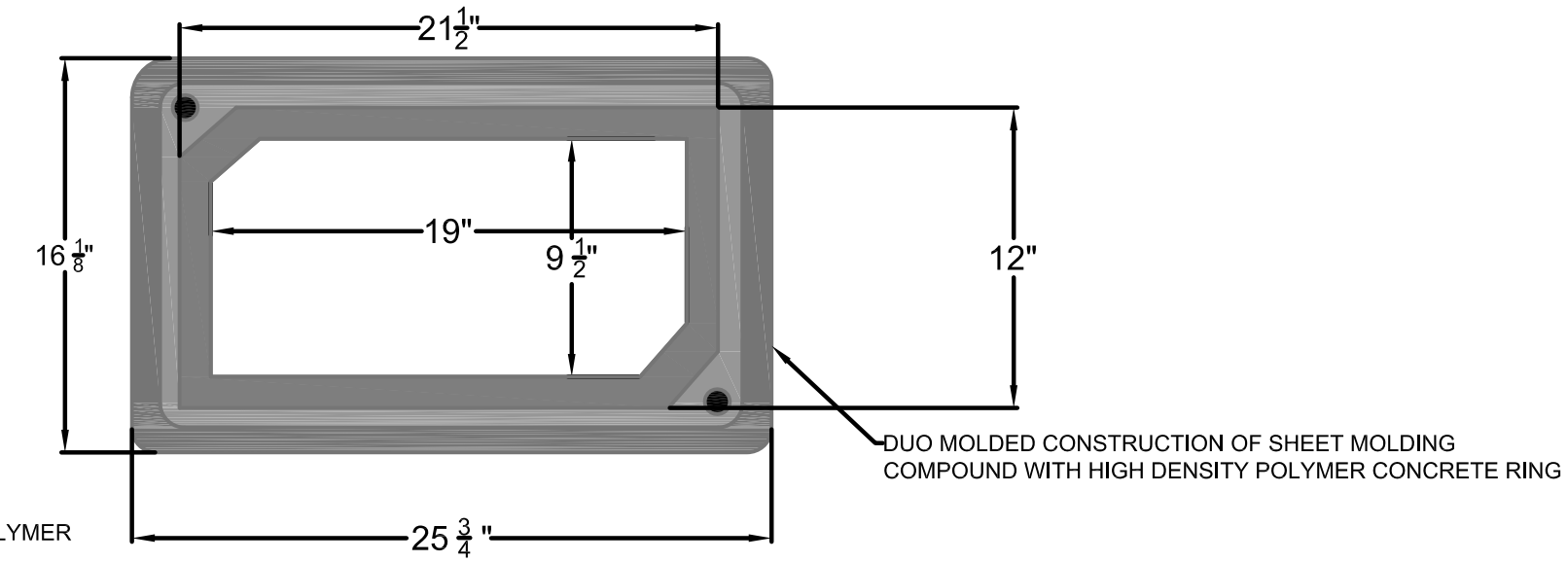

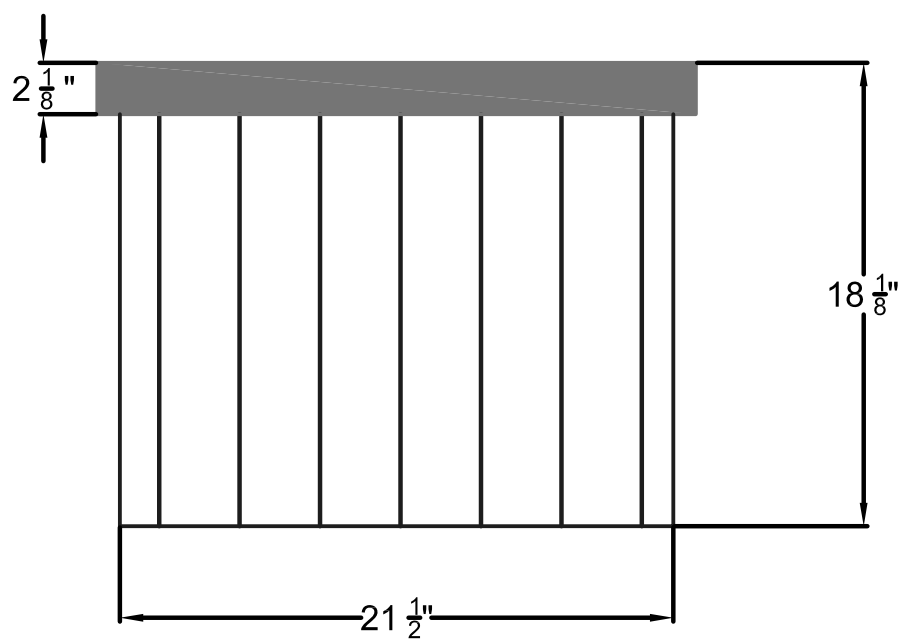

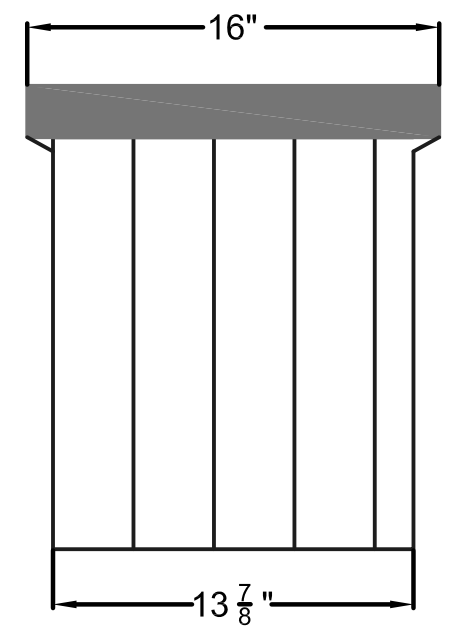

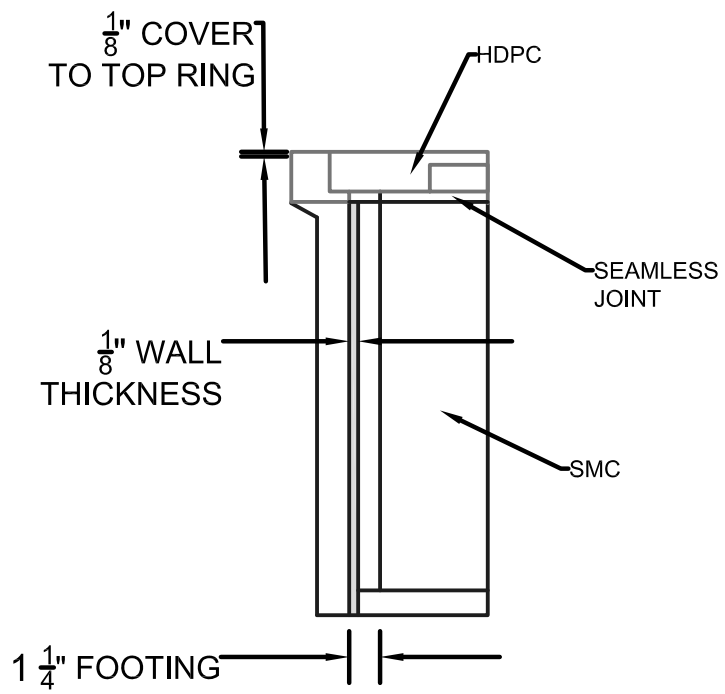

NO.	REVISIONS	DATE	BY

REFERENCE SPEC. NO.
CW 3620

DESIGNED BY
CHECKED BY
DRAWN BY JK
SCALE AS NOTED
APPROVED BY
DATE

ENGINEER'S SEAL

Winnipeg

THE CITY OF WINNIPEG
PUBLIC WORKS DEPARTMENT
TRANSPORTATION DIVISION

TRAFFIC SIGNALS SMALL
PRECAST SERVICE BOX
13 " X 24" X 18"

SHEET OF
CAD FILE DRAWING NUMBER
CITY DRAWING NUMBER
ST– 193