# CONSTRUCTION NOTES

1. PATCH & REPAIR ASPHALT AFFECTED BY NEW CONSTRUCTION
2. NEW BOLLARD – REFER TO DETAIL 1/AA–303
3. NEW C.I.P. CONCRETE RAMP, STAIRS AND LANDINGS C/W STEEL HANDRAILS PROVIDE
4. DETECTABLE WARNING SURFACE
5. EXTEND HANDRAIL– SEE DETAIL 4/A–202
6. CUT CONCRETE TO SUIT AND PROVIDE DETECTABLE WARNING SURFACE.
7. NEW HANDRAIL, GUARDRAIL AND CENTRE RAIL ON EXISTING CONCRETE STAIR AND LANDING
8. 2" CAST IN PLACE STAIR CONSTRASTING STAIR TREAD NOSING TYPICAL FOR ALL NEW STAIRS.

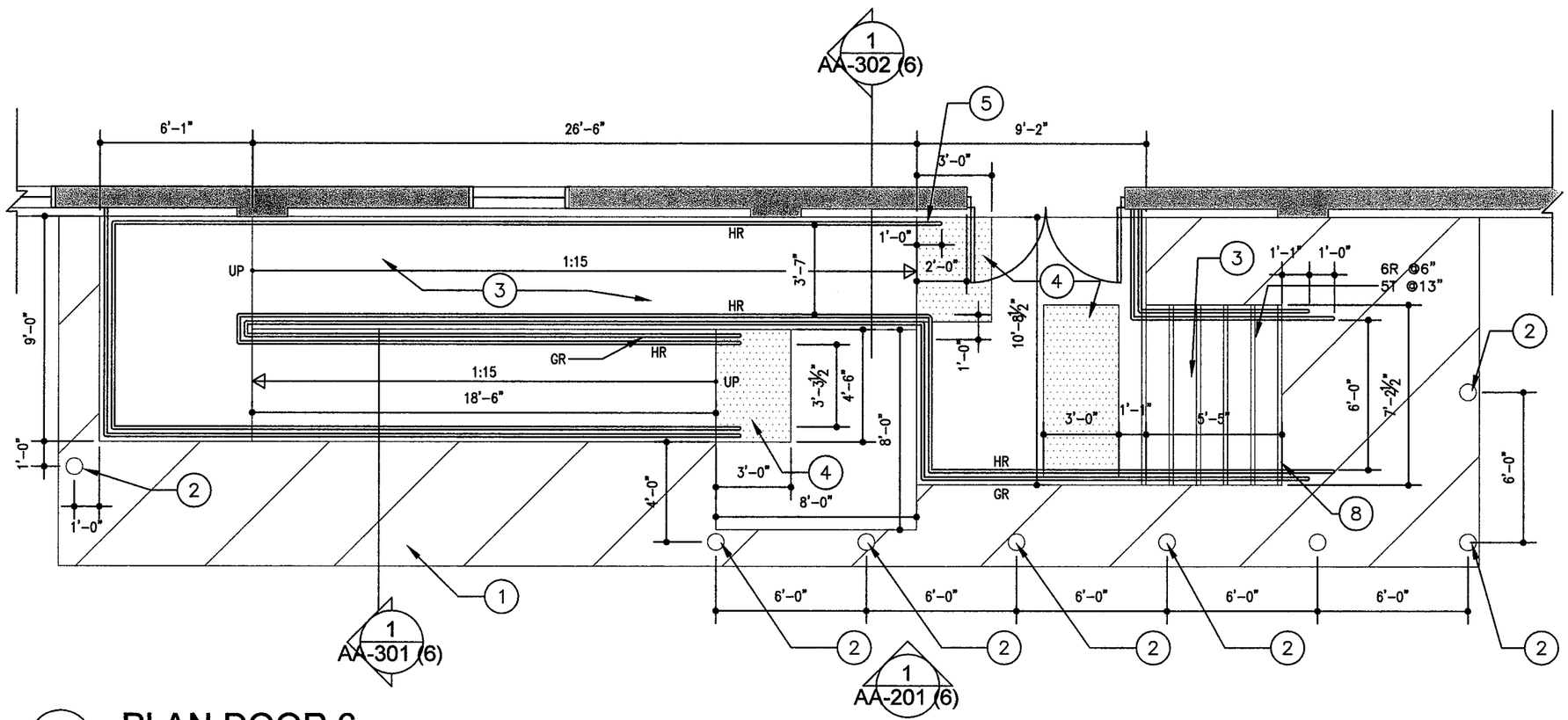


1 AA-102 (6) PLAN DOOR 6
3/16"=1'-0"


John van Leeuwen
Architecture and Design
211-63 Albert Street Wpg. MB R3B 1G4
Ph: 204-504-7443


CITY OF WINNIPEG
CENTRAL FREIGHT HOUSE
WHEELCHAIR RAMP AND STAIR
RETROFIT - DOOR 6
WINNIPEG, MANITOBA

CLIENT REVIEW SIGNATURE:

PROVINCE OF MANITOBA
JOHN B. VAN LEEUWEN
APRIL 8, 2015
REGISTERED ARCHITECT

ARCHITECTURAL SEAL

SHEET TITLE:
PLAN DOOR 6

PROJECT NO: 2014052
DRAWN BY: RR
CHECKED BY: JV
SCALE: 3/16"=1'-0"
ISSUED FOR: CONSTRUCTION
ISSUE DATE: APRIL 8, 2015

AA-102(6)
CD
DATE PLOTTED
4/8/15