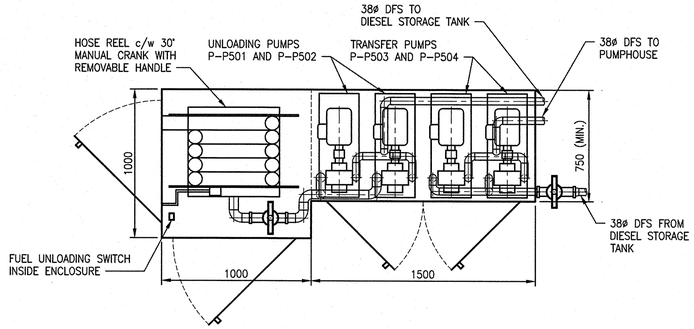

PLAN VIEW

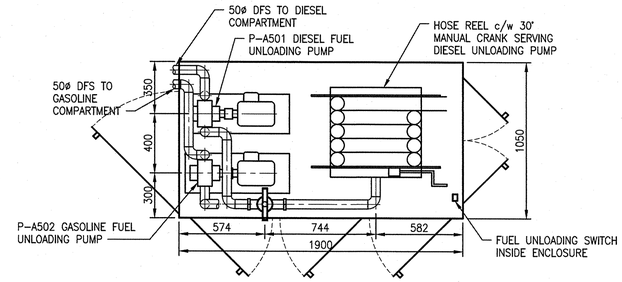

PLAN VIEW

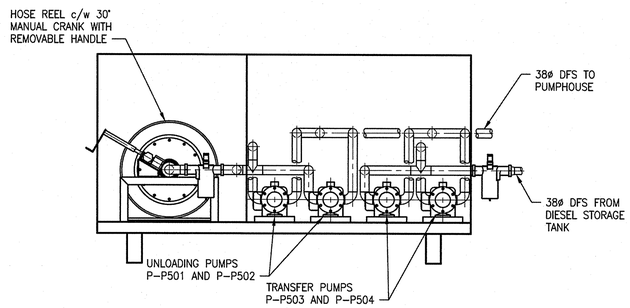

ELEVATION–INTERIOR VIEW

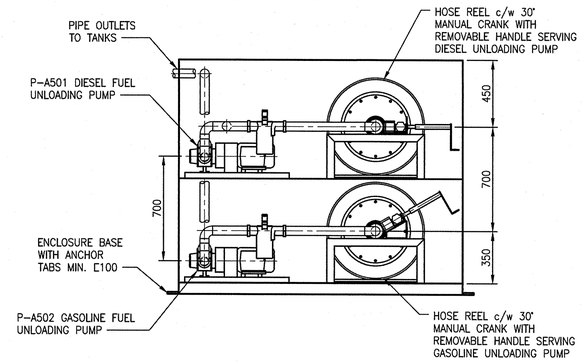

ELEVATION–INTERIOR VIEW

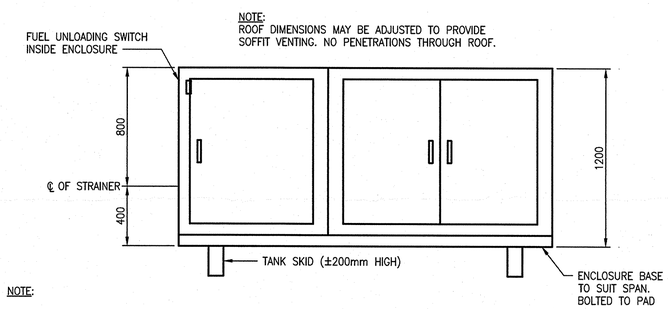

NOTE:
ROOF DIMENSIONS MAY BE ADJUSTED TO PROVIDE SOFFIT VENTING. NO PENETRATIONS THROUGH ROOF.

NOTE:

MECHANICAL AND METAL FABRICATIONS TO COORDINATE ALL DIMENSIONS AND DOOR LOCATIONS. SUBMIT SHOP DRAWINGS OF FINAL LAYOUTS FOR ALL ENCLOSURES. REFER SECTION 05 50 00.

ELEVATION–EXTERIOR VIEW

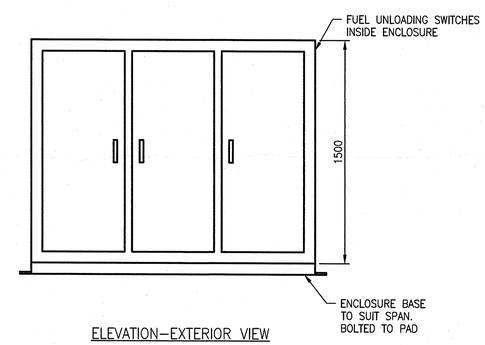

ELEVATION–EXTERIOR VIEW

1 / M0007 — UNLOADING & TRANSFER CABINET SERVING 25,000L DIESEL STORAGE TANK
SCALE 1:20

2 / M0007 — UNLOADING CABINET SERVING COMBINED 8,580L FUEL STORAGE TANK
SCALE 1:20

GENERAL NOTES

1. MECHANICAL AND METAL FABRICATIONS TO COORDINATE ALL DIMENSIONS AND DOOR LOCATIONS.
2. VENTING NOT SHOWN.
3. POSITION REELS/CRANKS TO ALLOW UNOBSTRUCTED CRANK OPERATION THROUGH OPEN DOOR.
4. REFER SECTION 05 50 00 FOR REQUIREMENTS.
5. SUBMIT SHOP DRAWINGS OF FINAL LAYOUTS FOR ALL ENCLOSURES.

BID OPPORTUNITY NO. 231-2015

DRAWING NUMBER	REFERENCE DRAWINGS

APEGM Certificate of Authorization
AECOM Canada Ltd.
No. 4671 Date: Apr 9/15

LOCATION APPROVED
UNDERGROUND STRUCTURES
SUPR. U/G STRUCTURES COMMITTEE — DATE

NOTE:
LOCATION OF UNDERGROUND STRUCTURES AS SHOWN ARE BASED ON THE BEST INFORMATION AVAILABLE. BUT NO GUARANTEE IS GIVEN THAT ALL EXISTING UTILITIES ARE SHOWN OR THAT THE GIVEN LOCATIONS ARE EXACT. CONFIRMATION OF EXISTENCE AND EXACT LOCATION OF ALL SERVICES MUST BE OBTAINED FROM THE INDIVIDUAL UTILITIES BEFORE PROCEEDING WITH CONSTRUCTION.

NO.	REVISIONS	YY/MM/DD	BY
0	ISSUED FOR TENDER, BID OPP. 231-2015	15/04/13	DRL

AECOM

DESIGNED BY	CC	CHECKED BY	GD
DRAWN BY	DRL	APPROVED BY	
HOR. SCALE	AS NOTED	RELEASED FOR CONSTRUCTION	
VERT. SCALE			
DATE		DATE	

PROFESSIONAL'S SEAL
PROVINCE OF MANITOBA
Apr 9/15
C.A.D. COURCHAINE
REGISTERED PROFESSIONAL ENGINEER

CONSULTANT DRAWING NO.
M0007

Winnipeg
THE CITY OF WINNIPEG
WATER AND WASTE DEPARTMENT

SHOAL LAKE
INTAKE FUEL STORAGE AND DELIVERY SYSTEM REHABILITATION
MECHANICAL
DIESEL & GASOLINE FUEL SYSTEMS DETAILS

SHEET 15 OF 23
CITY DRAWING NUMBER
1-0600A-M0007-001
REV 0

D SIZE 22" x 34" (559mm x 864mm)
PLOT: 15/04/09 12:35:10 PM
AECOM FILE NAME: M0007.dwg Saved By: landersd
AECOM REVIEW | DRFT CHK