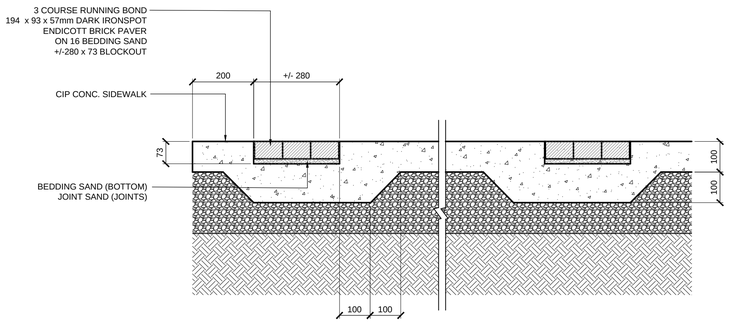

1 / L5.2 INDICATOR STRIP (TYP.)
SCALE 1:10

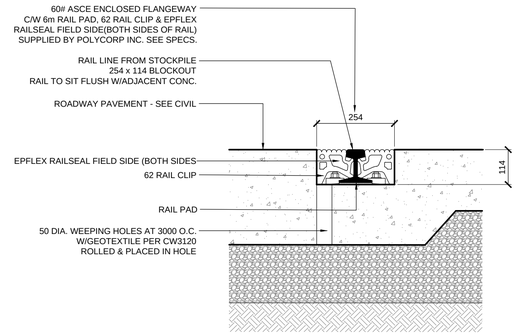

2 / L5.2 RAIL LINE
SCALE 1:10

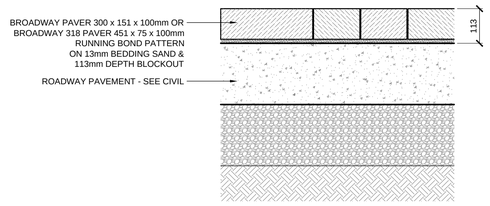

ROADWAY

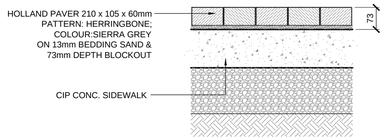

SIDEWALK

3 / L5.2 UNIT PAVERS IN CONC. BLOCKOUT
SCALE 1:10

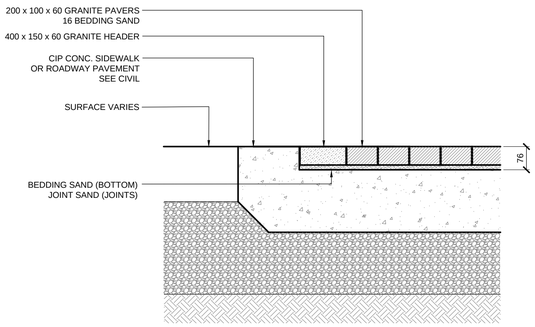

4 / L5.2 GRANITE PAVERS IN CONC. BLOCKOUT
SCALE 1:10

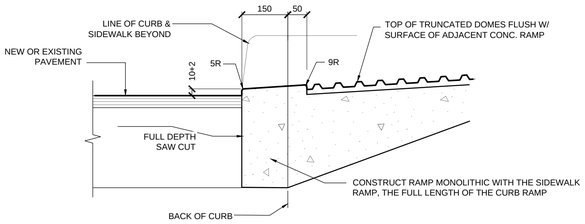

5 / L5.2 CURB RAMP W/ TACTILE WARNING TILE
SCALE NTS

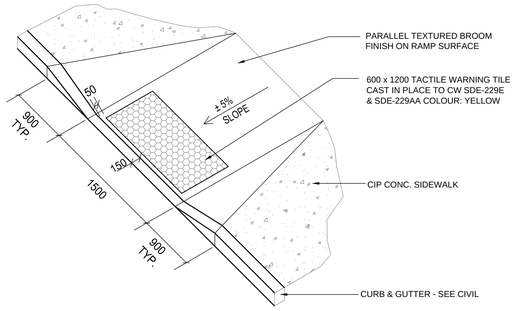

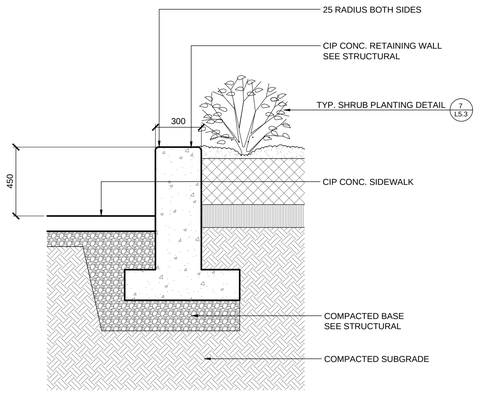

6 / L5.2 CONC. RETAINING WALL (TYP.)
SCALE 1:20

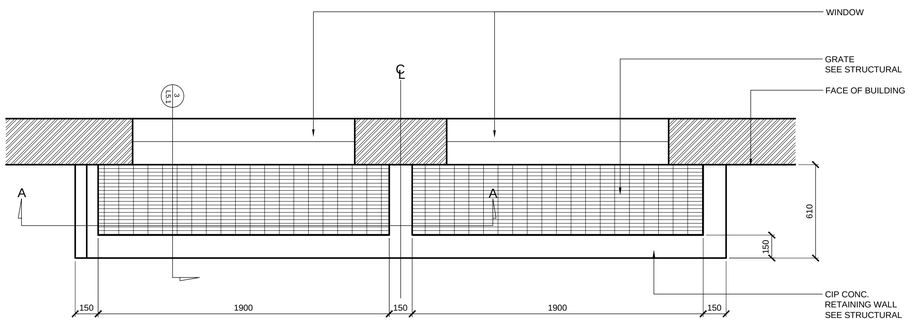

PLAN

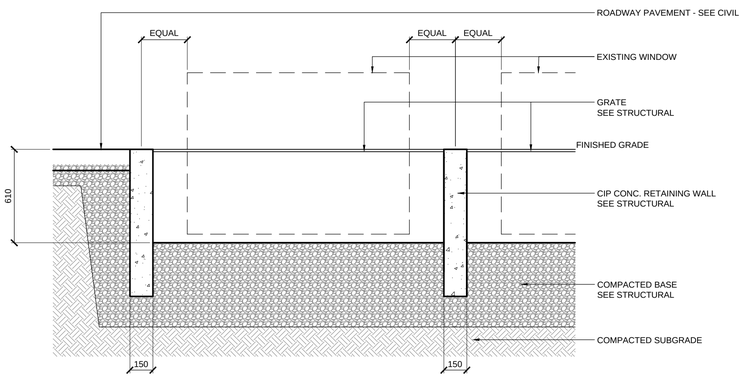

SECTION A-A

7 / L5.2 CONC. RETAINING WALL AT BERTHA WINDOW WELL
SCALE 1:20

LOCATIONS APPROVED
UNDERGROUND STRUCTURES

SIGNED BY: _____ _____
SUPV. U/G STRUCTURES DATE

LOCATION OF UNDERGROUND STRUCTURES AS SHOWN ARE BASED ON THE BEST INFORMATION AVAILABLE BUT NO GUARANTEE IS GIVEN THAT ALL EXISTING UTILITIES ARE SHOWN OR THAT THE GIVEN LOCATIONS ARE EXACT CONFIRMATION OF EXISTANCE AND EXACT LOCATION OF ALL SERVICES MUST BE OBTAINED FROM THE INDIVIDUAL UTILITIES BEFORE PROCEEDING

G.B.M. -
ELEV. -

NO.	REVISIONS	DATE	BY
F			
E			
D			
C			
B	ISSUED FOR TENDER	7/8/14	JH
A	ISSUED FOR 66% REVIEW	27/6/14	JH

HTFC PLANNING & DESIGN
500-115 Bannatyne Avenue East Winnipeg, MB R3B 0R3
PHONE 204-944-9997 WEB hdc.mb.ca

DESIGNED BY	JH	CHECKED BY	GM
DRAWN BY	JH	APPROVED BY	GM
HOR. SCALE	AS NOTED	RELEASED FOR CONSTRUCTION	
VERTICAL	AS NOTED		
DATE	AUG 7, 2014	DATE	

ENGINEER'S SEAL
Manitoba Association of Architects
Licensed Architect No. 61

CONSULTANT ACAD DWG. NO.
L5.2

Winnipeg

THE CITY OF WINNIPEG
PUBLIC WORKS DEPARTMENT
ENGINEERING SERVICES DIVISION

CITY OF WINNIPEG

HARDSCAPE DETAILS

CITY DRAWING NUMBER

SHEET 10 OF 11

BID NO.
742-2014

NOTE:
These design documents are prepared solely for the use by the party with whom the design professional has entered into a contract and there are no representations of any kind made by the design professional to any party with whom the design professional has not entered into a contract.

Aug 05, 2014 – 10:52am
\\gat\Vol1\Volumes\VITFC_FILE_SERVER\2014\14-049 East Exchange Implementation\ACAD\Details\14-049 Sections Details.dwg –tab:L5.2