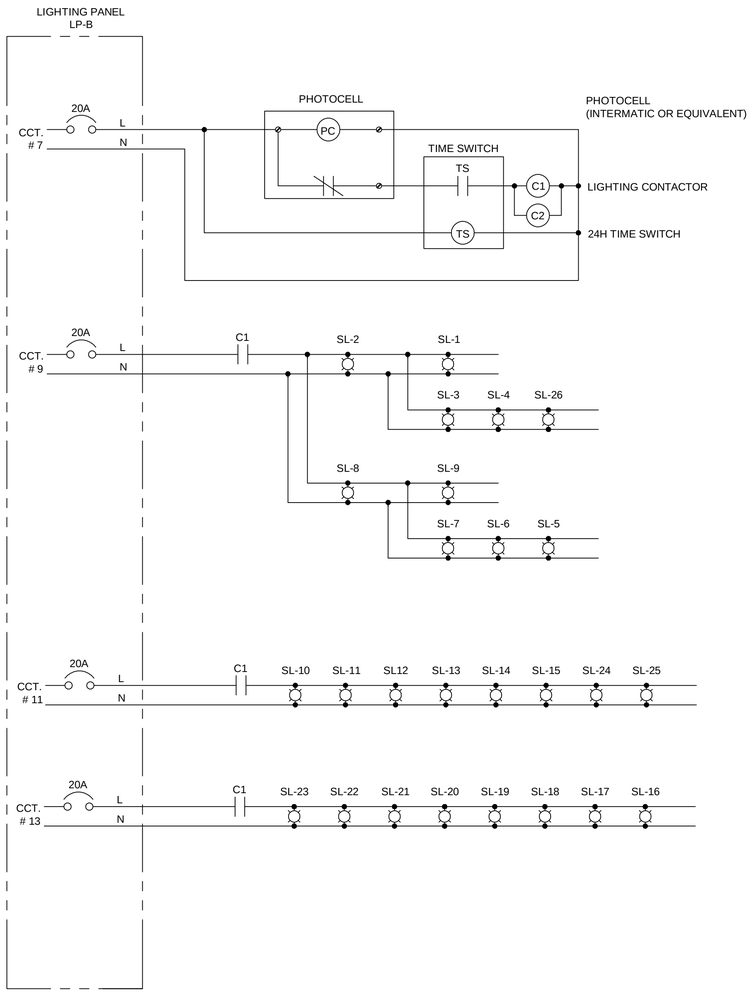

LIGHTING DISTRIBUTION SCHEMATIC
SCALE: N.T.S.

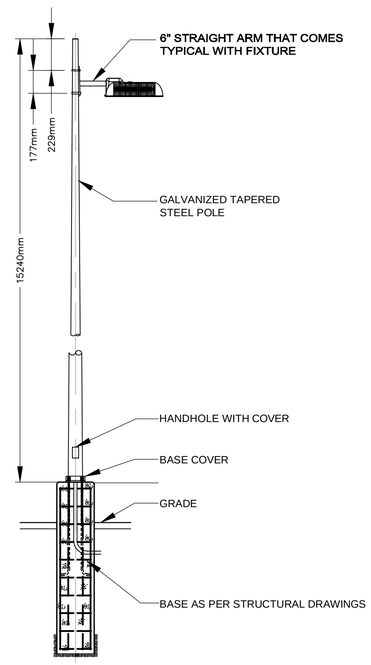

TYPICAL SITE LIGHTING POLE MOUNTING DETAIL
SCALE: N.T.S.

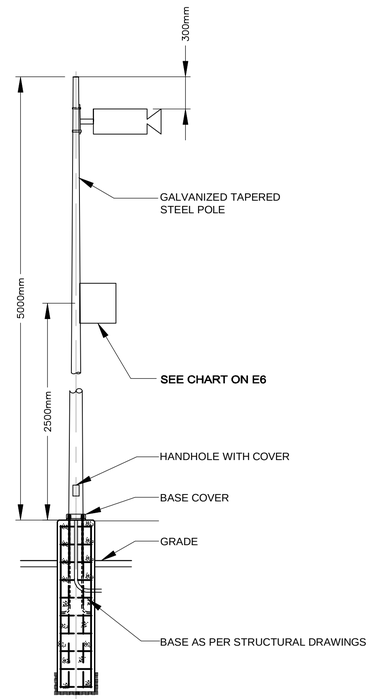

TYPICAL SECURITY CAMERA POLE MOUNTING DETAIL
SCALE: N.T.S.

APEGM
Certificate of Authorization
Dillon Consulting Limited (MB)
No. 1789 Date: 2014/06/19

METRIC

WHOLE NUMBERS INDICATE MILLIMETRES
DECIMALIZED NUMBERS INDICATE METRES

NO.	REVISIONS	DATE	BY
1	ISSUED FOR TENDER	14/06/19	ARR

B.M. ELEV.

DESIGNED BY JAD
DRAWN BY MS
CHECKED BY BM
APPROVED BY ARR
HOR. SCALE AS NOTED
VERTICAL
DATE MARCH 2014

DILLON CONSULTING

RELEASED FOR CONSTRUCTION
DATE

ENGINEER'S SEAL
PROVINCE OF MANITOBA
ORIGINAL STAMPED BY
B.L. MOORE
2014/06/19
REGISTERED PROFESSIONAL ENGINEER

CONSULTANT PROJECT NUMBER
13-8224

Winnipeg
THE CITY OF WINNIPEG
WATER AND WASTE DEPARTMENT

4R WINNIPEG DEPOT
BRADY ROAD RESOURCE
MANAGEMENT FACILITY

SITE - ELECTRICAL DETAILS

CITY DRAWING NUMBER
1-0400A-E0008-001
SHEET 33 OF 35
CONSULTANT DRAWING NUMBER
E8

G:\CAD\DFS\138224\04-Electrical\01-Contract\138224-04-ELEC-CON.dwg