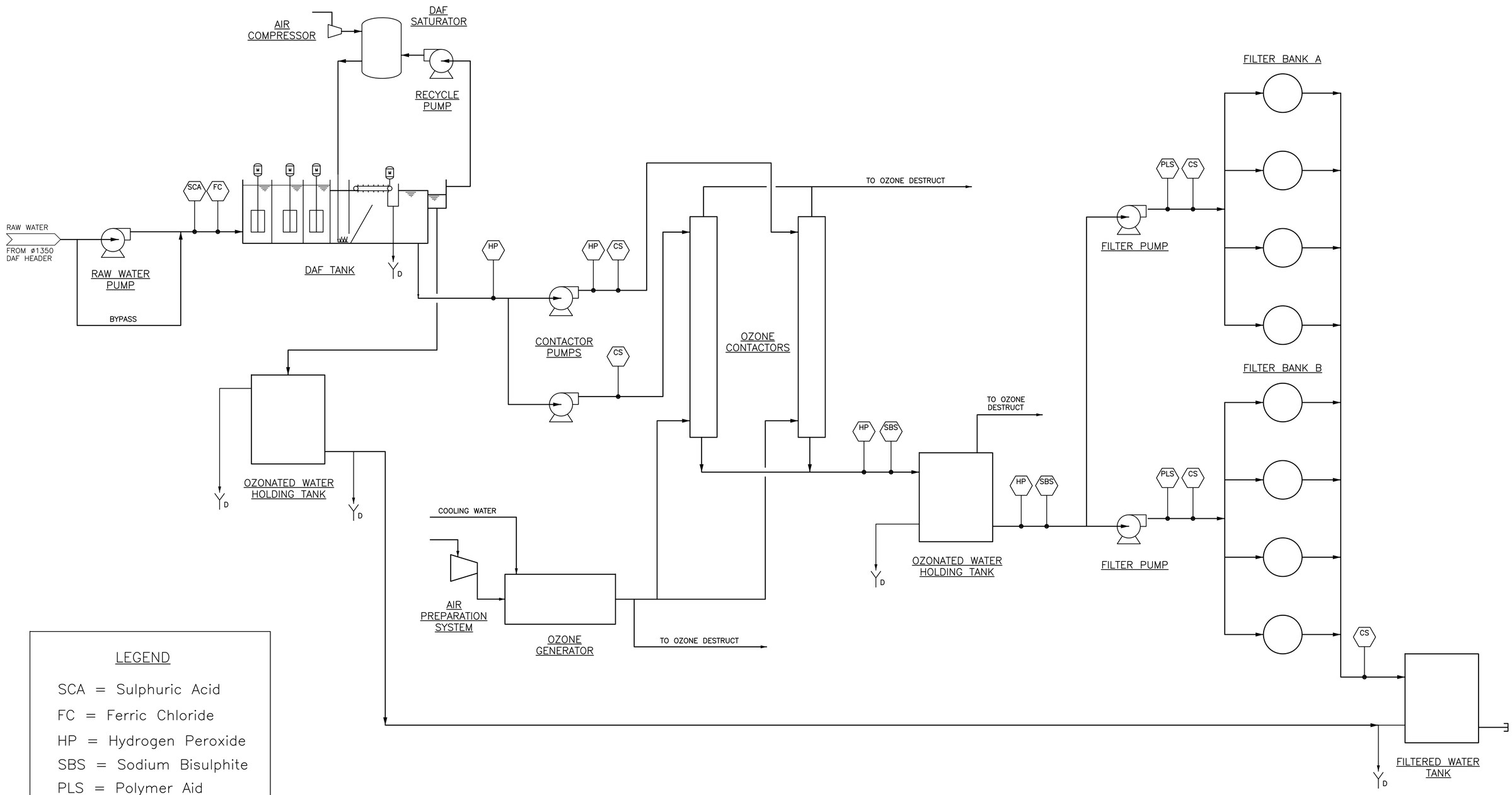

LEGEND

SCA = Sulphuric Acid
FC = Ferric Chloride
HP = Hydrogen Peroxide
SBS = Sodium Bisulphite
PLS = Polymer Aid
CS = Caustic Soda

APEGM
Certificate of Authorization
CH2M HILL Canada Ltd.
No. 1441 Date: 2014 06 13

B.M.
ELEV.
CONSTRUCTION COMPLETION DATE: YYYY MM DD

NO.	REVISIONS	DATE	BY
0	ISSUED FOR TENDER	14/06/13	JBC

CH2MHILL®

DESIGNED BY	KG	CHECKED BY	BW
DRAWN BY	JBC	APPROVED BY	BW
SCALE: HORIZONTAL	NTS	RELEASED FOR CONSTRUCTION	
VERTICAL	–		
DATE	2014 06 13	DATE	

PLOT DATE: 2014 06 13

ENGINEER'S SEAL
PROVINCE OF MANITOBA
WILLIAMSON
Member
22934
REGISTERED PROFESSIONAL ENGINEER

CONSULTANT DRAWING NUMBER
WX–D0003

BID OPPORTUNITY: 355–2014

Winnipeg
THE CITY OF WINNIPEG
WATER AND WASTE DEPARTMENT
ENGINEERING DIVISION

CITY OF WINNIPEG WATER TREATMENT RESEARCH AND PROCESS OPTIMIZATION FACILITY
GENERAL
PROCESS FLOW DIAGRAM

SHEET X OF X
CITY DRAWING NUMBER
1–0601X–D0003–001–00

FILE PATH: \\WINNIPEG\Proj\WinnipegCityof\462784Waterworks\DMS\DLV\
FILE NAME: 462784–D–0003.dwg