DRAWING NOTES:

1. –HOT WATER TANK
2. –EXHAUST FANS TO BE OPERATED ON MOTION SENSOR C/W WIREGUARD (REFER TO MECHANICAL DRAWINGS)
3. –FCP–1.; COORDINATE ADEQUATE CLEARANCE WITH MECHANICAL TRADES PRIOR TO ORDERING & INSTALLATION AS LOCATION OF ELECTRICAL PANEL IMMEDIATELY ADJACENT FCP–1.
4. –EXTERIOR VANDAL RESISTANT LUMINAIRES TO OPERATE ON MOTION SENSOR. (EXTERIOR LUMINAIRES TO ONLY OPERATE UPON MOVEMENT ADJACENT THE COMFORT STATION BUILDING. VANDAL RESISTANT MOTION CONTROL C/W WIREGUARD.
5. –INTERIOR VANDAL RESISTANT LUMINAIRES & EXHAUST FANS TO OPERATE ON GREENGATE MICROSET DUAL TECH LINE VOLTAGE CEILING SENSOR C/W WIREGUARD.
6. –WEATHERPROOF SERVICE HEAD & EXTERIOR METER SOCKET. EXTEND SERVICE CONDUCTORS TO 15' ABOVE GRADE. PROVIDE 36" INCH LOOP FOR MANITOBA HYDRO TERMINATION. COORDINATE WITH MANITOBA HYDRO FOR CONNECTION.
7. –HEAT TRACE TAPE TO RUN FOR A MIN. 12' OF PIPE RUN FOR INCOMING WATER LINE. COORDINATE REQUIREMENTS WITH MECHANICAL CONSULTANT PRIOR TO INSTALLATION & ORDERING OF MATERIALS. HEAT TRACE SHALL BE EQUAL TO EMERSON PSR ELECTRICAL HEAT TRACE TAPE – "PSR 1020 250W 120V"
8. –PANEL "A" MUST MAINTAIN 1 METER CLEARANCE DIRECTLY IN FRONT OF PANEL.
9. –HAND DRYER (AS SPEC.'ED BY ARCHITECT)EXTREME AIR GXT9–C
10. –JB FOR MOTION SENSOR FAUCET.(COORDINATE EXACT LOCATION/REQUIREMENTS WITH MECHANICAL PRIOR TO ORDERING & INSTALLATION)

SYMBOL LEGEND

EX	TYPE E – EXTERIOR VANDAL RESISTANT LUMINAIRE. LUMINAIRE LIGHTING VPF4–3–21WHP–3500K–120–CP–BLK–WET–TX/SD
IN	TYPE E – INTERIOR VANDAL RESITANT LUMINAIRE. LUMINAIRE LIGHTING LVP751–56W–3500K–120–CP–WHT–TX/SD
OS	GREENGATE MICROSET DUAL TECH LINE VOLTAGE CEILING SENSOR C/W WG
	MOTOR OUTLET
	DISCONNECT SWITCH–EXTERIOR=WEATHERPROOF
15	RECEPTACLE: 15 AMP DUPLEX
GF	RECEPTACLE: 15 AMP GFCI RECEPTACLE C/W WEATHER PROOF COVER
JB	JUNCTION BOX
	POWER PANEL
T	HEATING COOLING THERMOSAT (C/W CONTROL WIRING TO FAN COIL UNIT)
MS	GREENGATE MOTION SENSOR C/W WIREGUARD.
	DIRECT CONNECTION
	3' BY 4' PLYWOOD BBRD (GOOD ONE SIDE) PAINTED GREY
TS	REMOTE T STAT SENSOR (REFER TO MECHANICAL FOR SPECS)

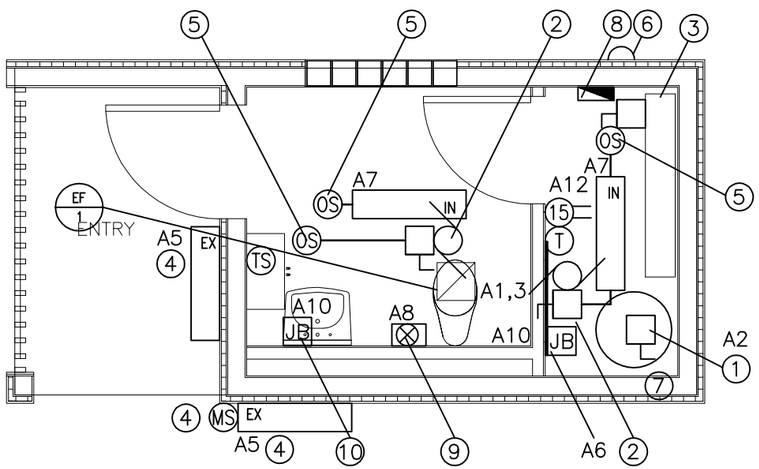

LIGHTING, POWER & SYSTEMS

SCALE: 1/4" = 1'–0"

ADDITIONAL (THE CITY) REQUIREMENTS) INCLUDED IN THE ELECTRICAL SCOPE OF WORK:

–INSTALL A ¾" PLYWOOD (3'W X 4'H GOOD ONE SIDE, PAINTED GREY) ON THE INSIDE WALL OF THE MECHANICAL ROOM. THE PLYWOOD MUST BE MOUNTED ONE FOOT AWAY FROM THE MECHANICAL ROOM DOOR AND THREE FEET OFF THE FLOOR.
–SUPPLY ONE 120 VOLT CIRCUIT IN A SINGLE GANG ELECTRICAL BOX TO THE TOP LEFT CORNER OF THE PLYWOOD.
–INSTALL TWO ¾" EMT PIPES FROM THE TOP OF THE PLYWOOD TO THE INSIDE CORNER (DOOR LATCH SIDE) OF BOTH THE WASHROOM AND MECHANICAL DOOR FRAMES. THIS PIPE WILL BE USED TO SUPPLY POWER TO THE DOOR FOR THE ELECTRIC STRIKES AND THE CONTACTS.
–INSTALL A ½" EMT PIPE (CARD READER) INSIDE THE WALL, 30 INCHES OFF THE FLOOR AND ONE FOOT AWAY FROM THE WASHROOM DOOR ENTRANCE HANDLE. THE WASHROOM DOOR CARD READER WILL BE INSTALLED INSIDE THE WALL ONE FOOT FROM THE DOOR LATCH. A 6"X6" ACCESS HATCH WILL HAVE TO BE INSTALLED ON THE INSIDE WALL TO SERVICE THE CARD READER.
–ALL PIPE FOR FUTURE OWNER USE TO HAVE PULL WIRES INSTALLED. PULL WIRES FOR THE CARD READERS MUST END AT THE DOOR STRIKE PLATE ON THE FRAME FOR BOTH DOORS.

–THE PANIC BUTTON, STROBE LIGHT, DOOR CONTACTS, DOOR STRIKES POWER SUPPLY, AND CARD ACCESS PANEL IS NOT A PART OF THIS SCOPE OF WORK & WILL BE INSTALLED AT A LATER DATE BY THE CITY.

REV	DATE	DESCRIPTION	BY	CHK	APP
Ø	JUNE 20/13	ISSUED FOR TENDER & CONSTRUCTION	PY	RK	

PROVINCE OF MANITOBA – R.C.P. KOST – JUNE 20/13 – PROFESSIONAL ENGINEER

MEG–A–RON ENGINEERING SERVICES
22 MITCHELL BAY
ST. ANDREWS, MANITOBA
R1A 3A3

APEGM Certificate of Authorization
Meg–A–Ron Engineering Services
No. 4401 Date: June 20, 2013

DRAWN BY:	PY		
DATE:	APRIL 10/13		
SCALE:	1/4" = 1' 0"		
CHECKED BY:	––	DATE:	
APPROVED BY:		DATE:	

CLIENT: VICTOR SUEN ARCHITECT
23 STORMANT DRIVE
WINNIPEG, MANITOBA

PROJECT: WINNIPEG TRANSIT
COMFORT STATION
WINNIPEG, MANITOBA

REFERENCE DRAWINGS

DRAWING TITLE: ELECTRICAL POWER & SYSTEMS, AND LIGHTING

DRAWING NO: E–01

REVISION: Ø

SUMITECH SERVICES LIMITED
TECHNICAL SERVICES
PROJECT MANAGERS
166 eugenie street
winnipeg, manitoba
R2H 0X8
tel: 204 235 0940
fax: 204 235 0943
email: sumitech3@shaw.ca