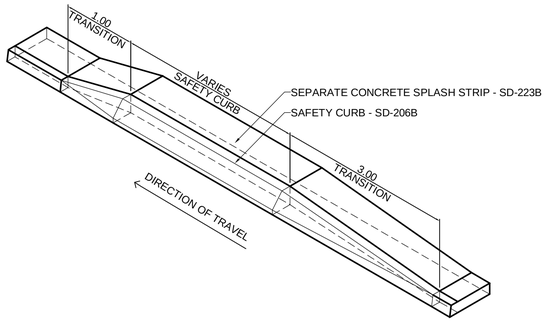

1 / 17 33 SAFETY CURB TRANSITION
SCALE 1:50

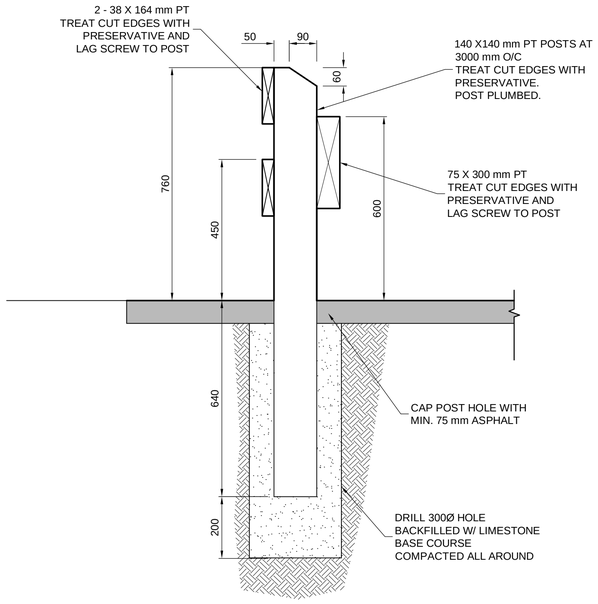

2 / 26 33 FENCE DETAIL
SCALE 1:10

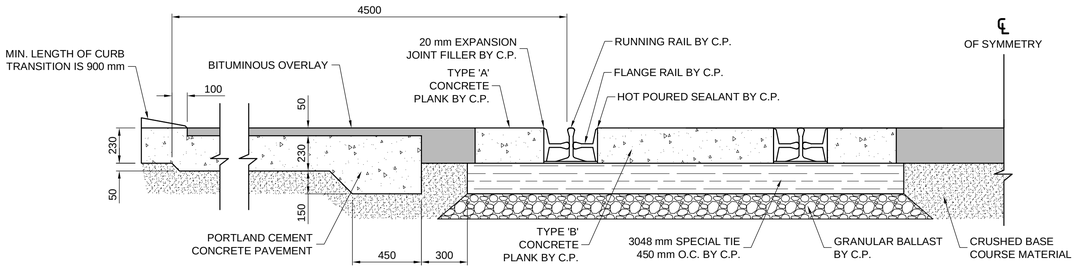

3 / 17 33 TYPICAL RAILROAD CROSSING UTILIZING CONCRETE PLANKS (SD-230)
SCALE 1:20

METRIC

WHOLE NUMBERS INDICATE MILLIMETRES
DECIMALIZED NUMBERS INDICATE METRES

APEGM
Certificate of Authorization
Dillon Consulting Limited (MB)
No. 1789 Date: 01/14/2014

150 WM	WATERMAIN	150 WM	HYDRO	HYDRO	HYDRO	150 WM	WATERMAIN	150 WM
	HYDRANT		MTS	M.T.S.	MTS		HYDRANT	
	VALVE			CONCRETE			VALVE	
300 LDS	LAND DRAINAGE SEWER	300 LDS		ASPHALT		300 LDS	LAND DRAINAGE SEWER	300 LDS
250 WWS	WASTE WATER SEWER	250 WWS		PLANING		250 WWS	WASTE WATER SEWER	250 WWS
	MANHOLE			SIDEWALK			℄ PROFILE	
	CATCH BASIN			PAVING STONES			NORTH/WEST GUTTER	
	CURB INLET			PARTIAL DEPTH REPAIR			SOUTH/EAST GUTTER	
	JUNCTIONS			PROPERTY LINE			NORTH/WEST DITCH	
	CULVERT			DRAINAGE ARROW			SOUTH/EAST DITCH	
100 GAS	GAS	100 GAS		CURB RAMP				
EXISTING	LEGEND–PLAN	PROPOSED	EXISTING	LEGEND–PLAN	PROPOSED	EXISTING	LEGEND–PROFILE	PROPOSED

UNDERGROUND STRUCTURES

SUPV. U/G STRUCTURES DATE

LOCATION OF UNDERGROUND STRUCTURES AS SHOWN ARE BASED ON THE BEST INFORMATION AVAILABLE, BUT NO GUARANTEE IS GIVEN THAT ALL EXISTING UTILITIES ARE SHOWN OR THAT THE GIVEN LOCATIONS ARE EXACT. CONFIRMATION OF EXISTENCE AND EXACT LOCATION OF ALL SERVICES MUST BE OBTAINED FROM THE INDIVIDUAL UTILITIES BEFORE PROCEEDING WITH CONSTRUCTION.

B.M.
ELEV.

NO.	REVISIONS	DATE	BY
4	ISSUED FOR ADDENDUM NO. 3	01/14/14	JNC
3	ISSUED FOR TENDER	12/16/13	JNC
2	ISSUED FOR REVIEW	07/22/13	JNC
1	ISSUED FOR REVIEW	06/21/13	JNC

DESIGNED BY JMS/MRD
DRAWN BY TJH
CHECKED BY JNC
APPROVED BY DPK
HOR. SCALE
VERTICAL
DATE 01/14/2014

DILLON CONSULTING

RELEASED FOR CONSTRUCTION

DATE

ENGINEER'S SEAL
PROVINCE OF MANITOBA
ORIGINAL STAMPED BY
J.N. CRANG
01/14/2014
REGISTERED PROFESSIONAL ENGINEER

CONSULTANT PROJECT NUMBER
12-7055

Winnipeg

THE CITY OF WINNIPEG
PUBLIC WORKS DEPARTMENT

PANET ROAD/MOLSON STREET
RECONSTRUCTION AND TWINNING

DETAILS

CITY DRAWING NUMBER
P-3350-33

SHEET 33 OF 47

CONSULTANT DRAWING NUMBER

G:\CAD\127055\02-Civil\01-Contract\20-Sections-Details.dwg