A1 SIZE - 594mm x 841mm

NOTES:

1. 24VDC POWER SUPPLIES TO BE CAPABLE OF PARALLEL OPERATION.

FUSE SCHEDULE			
TB	IDENTIFIER	SIZE	RATED CURRENT
TB10	F10	5x20mm	1A
	F11	5x20mm	5A
	F12	5x20mm	3A
	F13	5x20mm	1A
	F14	5x20mm	1A
	F15	5x20mm	1A
	F16	5x20mm	1A
	F17	5x20mm	1A
TB11	F20	5x20mm	3A
	F21	5x20mm	1A
	F22	5x20mm	1A

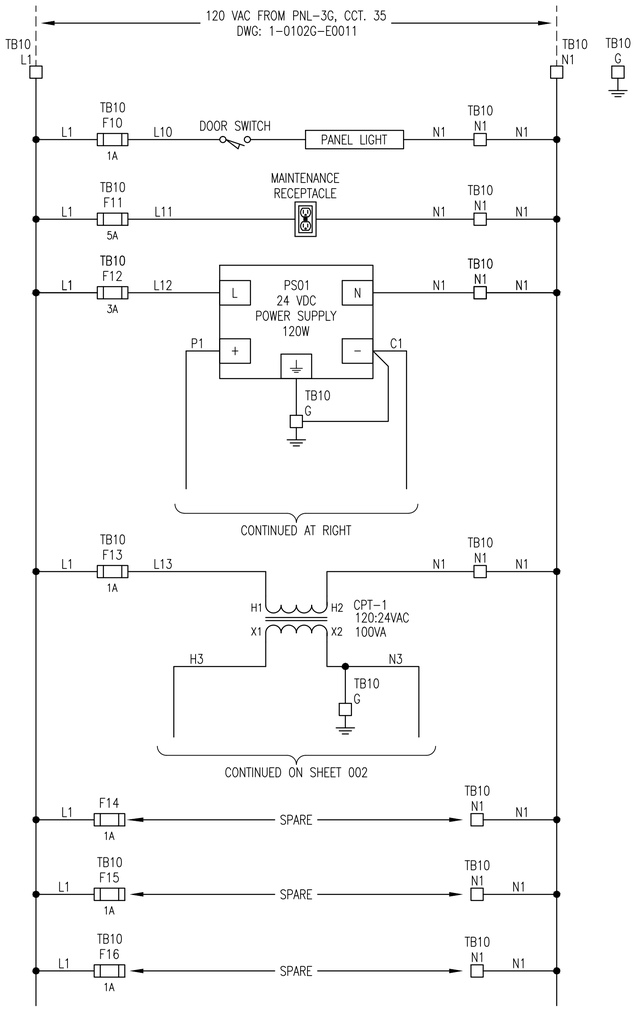

TERMINAL LAYOUT TB10
L1
N1
G
F10
F11
F12
F13
F14
F15
F16
F17
N1
N1
N1
N1
N1
N1
N1
N1

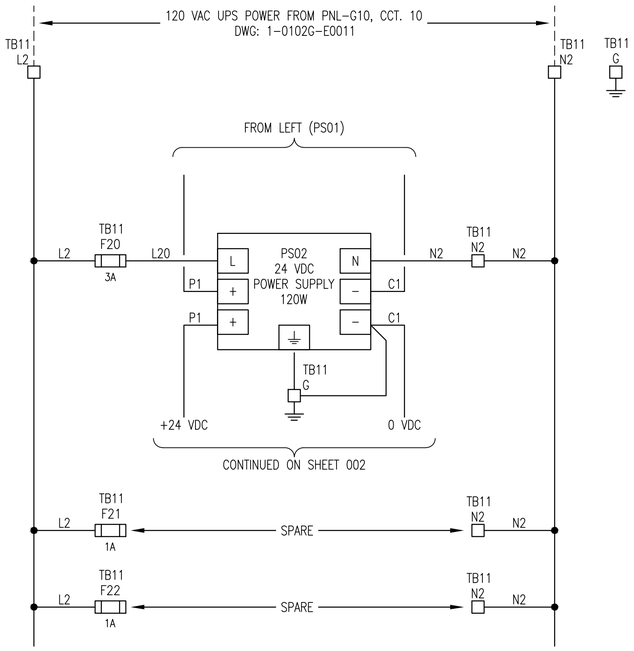

TERMINAL LAYOUT TB11
L2
N2
G
20
F21
F22
N2
N2
N2

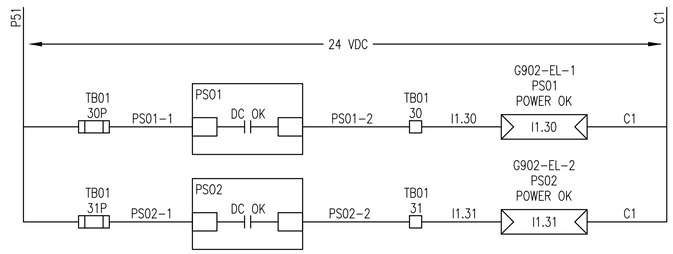

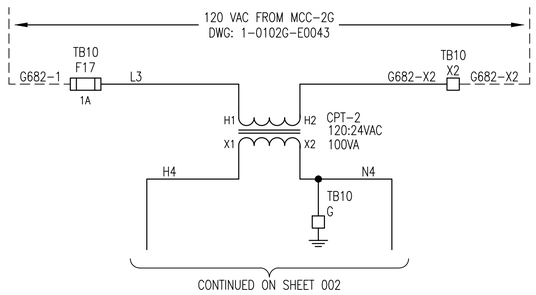

APEGM Certificate of Authorization
SNC-Lavalin Inc.
No. 4489

NO.	REVISIONS	DATE	DESIGN	CHECK
01	ISSUED FOR TENDER, BID OPP. 42-2013	2013/01/15	TMC	CJR
00	ISSUED FOR TENDER, BID OPP. 545-2012	2012/08/31	TMC	CJR

SNC·LAVALIN
SNC-LAVALIN INC.
148 Nature Park Way
Winnipeg, MB, Canada R3P 0X7
204-786-8080

DESIGNED BY: T. CHURCH	CHECKED BY: C. REIMER
DRAWN BY: MJ. PERSSON	APPROVED BY: C. REIMER
SCALE: NTS	RELEASED FOR CONSTRUCTION BY: N. HARRINGTON
DATE: 2012/01/31	DATE: 2012/08/31
CONSULTANT NO.: 112577-0116-48DD-0109	

ENGINEER'S SEAL
PROVINCE OF MANITOBA
T. M. CHURCH
Member 32682
REGISTERED PROFESSIONAL ENGINEER
Jan. 16 2013
Rev. 01

Winnipeg
THE CITY OF WINNIPEG
WATER AND WASTE DEPARTMENT

SOUTH END WATER POLLUTION CONTROL CENTRE
VENTILATION & MISC UPGRADES
POWER DISTRIBUTION SCHEMATIC
LCP-G2

CITY DRAWING NUMBER	SHEET	REV.	SIZE
1-0102G-A0108	001	01	A1

1-0102G-A0108-001-01.dwg

LAST SAVE: 2013/01/15 - 12:42pm
PATH: M:\112577\0116\4ENG\48I&C\DD - General DWG\1-0102G-A0108-001-01.dwg