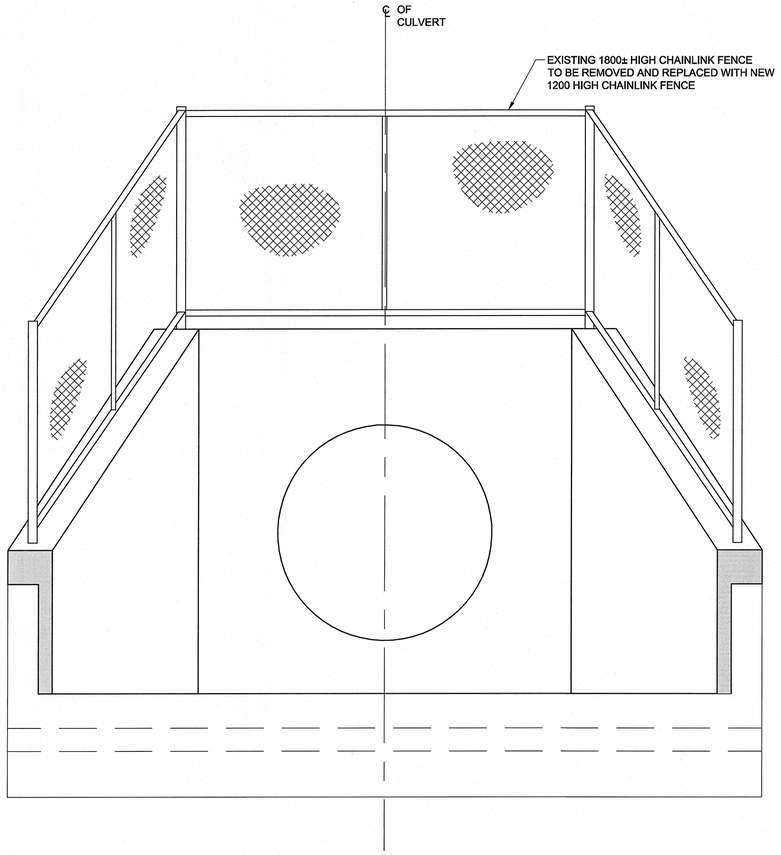

FRONT END ELEVATION

Scale 1:25

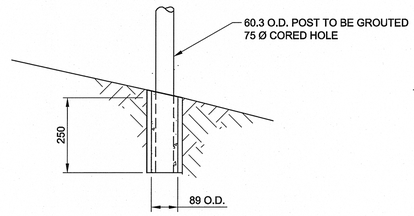

POST INSERT DETAILS

Scale 1:10

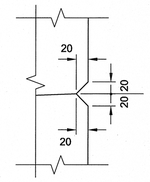

1 DETAIL

Scale 1:5

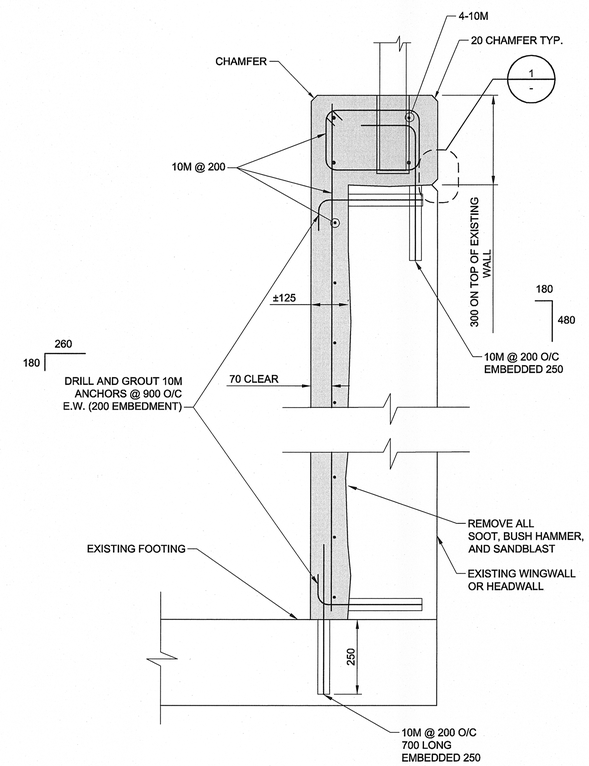

A SECTION

Scale 1:10

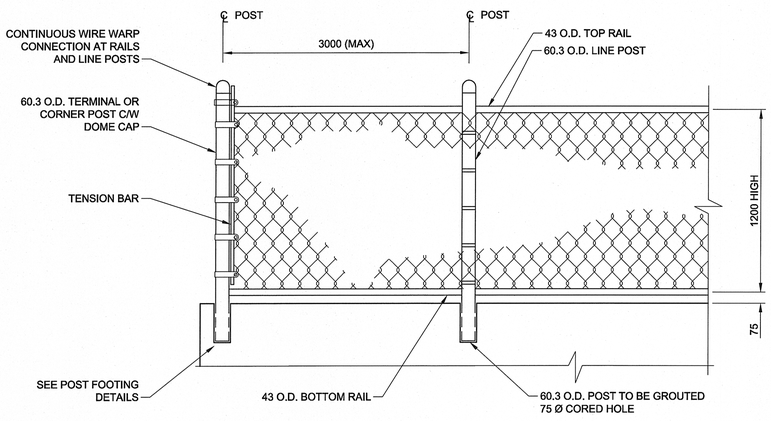

CHAIN LINK FENCE DETAIL

Scale 1:20

TYPICAL BOTH ENDS

NOTE:

1. ALL FENCING TO BE GALV. AS SPECIFIED, AND TOUCHED UP USING THE HOT-APPLIED PROCESS AS SPEC'D
2. ALL FENCING IS TO HAVE A SMOOTH PROFILE
3. NO SHARP POINTS TO REMAIN ON WIRE MESH FABRIC, FENCING MESH SHALL BE KNUCKLED AT BOTH EDGES.
4. ALL POSTS TO BE VERTICAL

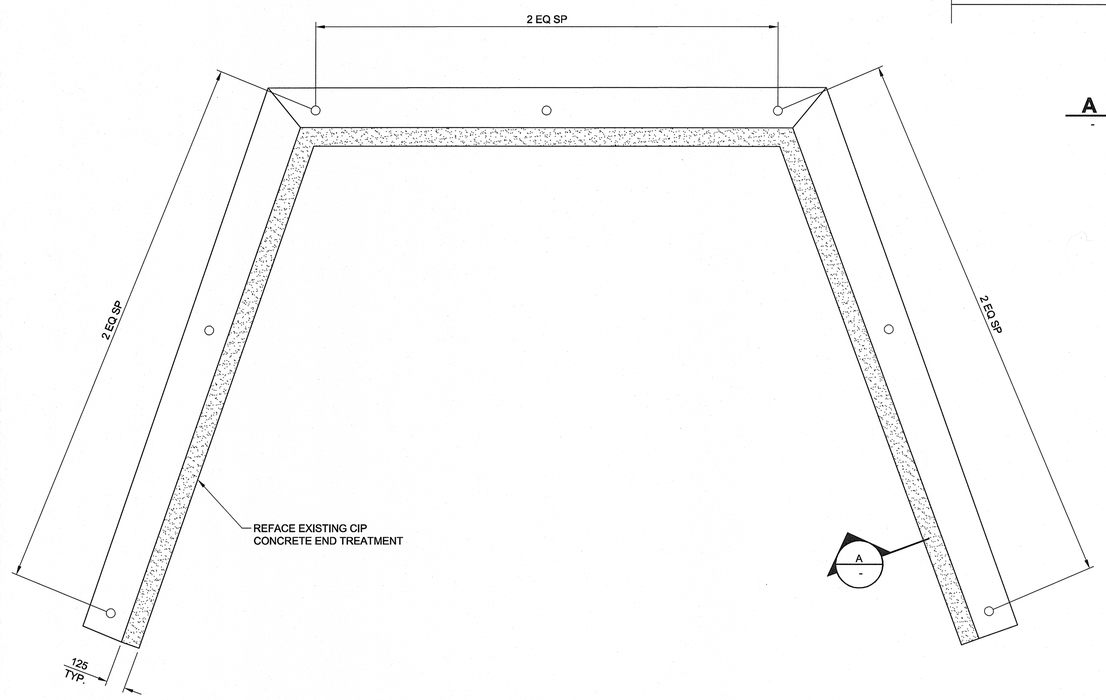

PLAN

Scale 1:20

BID OPPORTUNITY NO. 1007-2013

LOCATION APPROVED
UNDERGROUND STRUCTURES

SUPV. U/G STRUCTURES COMMITTEE — DATE

NOTE:

LOCATION OF UNDERGROUND STRUCTURES AS SHOWN ARE BASED ON THE BEST INFORMATION AVAILABLE. BUT NO GUARANTEE IS GIVEN THAT ALL EXISTING UTILITIES ARE SHOWN OR THAT THE GIVEN LOCATIONS ARE EXACT. CONFIRMATION OF EXISTENCE AND EXACT LOCATION OF ALL SERVICES MUST BE OBTAINED FROM THE INDIVIDUAL UTILITIES BEFORE PROCEEDING WITH CONSTRUCTION.

B.M.
ELEV.

NO.	REVISIONS	DATE	BY
0	ISSUED FOR TENDER	2013/12/05	CK

AECOM

DESIGNED BY	FT	CHECKED BY	SBB
DRAWN BY	KC	APPROVED BY	SBB
HOR. SCALE:	AS NOTED	RELEASED FOR CONSTRUCTION BY:	
VERTICAL:	AS NOTED		
DATE	2013-11-29	DATE	

ENGINEER'S SEAL

PROVINCE OF MANITOBA — S.B. BISWANGER — 2013.12.05 — REGISTERED PROFESSIONAL ENGINEER

CONSULTANT DRAWING NO.
60311395-01-CS-004

Winnipeg

THE CITY OF WINNIPEG
PUBLIC WORKS DEPARTMENT

EMERGENCY WORKS AT PORTAGE AVENUE CULVERT (TRURO CREEK)

CITY DRAWING NUMBER C307-13-03

SHEET 3 OF 4

NORTH ENTRANCE PLAN & DETAILS

CS-003

Certificate of Authorization
AECOM Canada Ltd.
No. 4671 Date: 2013/12/05

A1 - 841x594

2013-12-05

CDV-FULL.CTB

P:\60311395\900-WORK\910-CAD\20-SHEETS\CS\2013-12-05 ISSUED FOR TENDER\60311395-01-CS-004.DWG