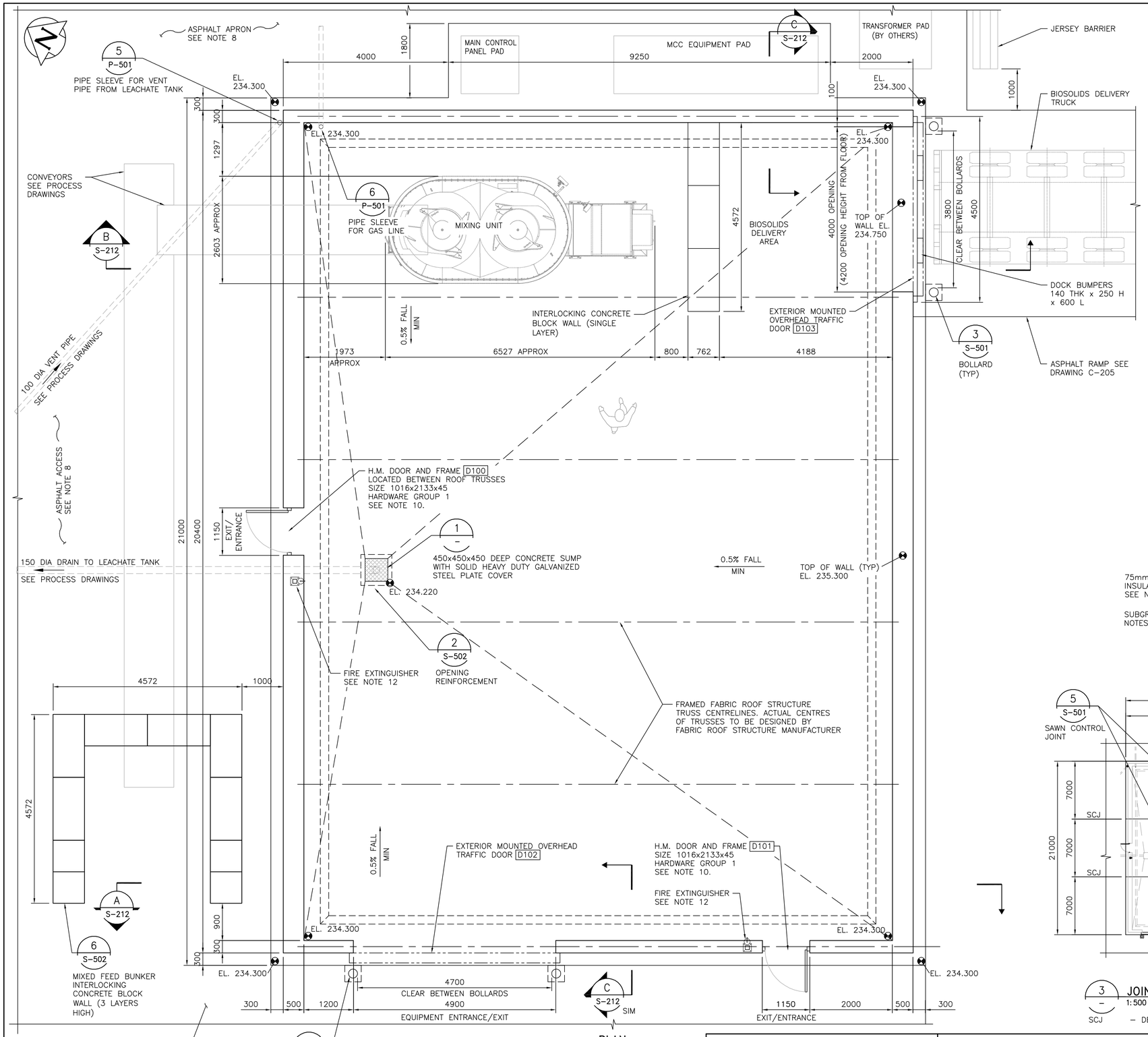

PLAN
1:100

NOTES:

1. ALL DIMESIONS ARE IN MILLIMETRES UNLES NOTED OTHERWISE.
2. REFER TO DRAWING NO. S-001 FOR GENERAL NOTES.
3. FOUNDATIONS SUBGRADE TO BE A MINIMUM OF 400mm THICK CRUSHED LIMESTONE (300mm OF 50mm UNDERLYING 100mm OF 19mm) COMPACTED TO 98% SPMDD UNDERLYING 98% SPMDD COMPACTED CLAY MAXIMUM LIFTS OF 150mm.
4. PROVIDE SUBGRADE BEARING CAPACITY OF 150 kPa (SLS). CONTRACT ADMINISTRATOR TO CONFIRM PRIOR TO POURING FOUNDATIONS.
5. PROVIDE 75mm INSULATION UNDER ALL CONCRETE SLABS AND AROUND PERIMETER OF THICKENED EDGE AND AWAY FROM FOOTING 2000mm. PROVIDE SLIGHT SLOPE IN INSULATION TO AVOID PONDING OF WATER.
6. FRAMED FABRIC ROOF STRUCTURE BY CONTRACTOR. REFER TO SECTION 13122 OF THE SPECIFICATION.
7. FACTORED MAX. AND MIN. ALLOWABLE FRAMED FABRIC ROOF STRUCTURE REACTIONS ACTING ON NORTH AND SOUTH WALLS ARE AS SHOWN IN 2 S-212
8. REFER TO CIVIL DRAWING C-205 FOR ASPHALT APRON ELEVATIONS, GRADES AND GENERAL SITE LAYOUT.
9. REFER TO DRAWING P-204 FOR CONVEYOR BELT PENETRATION REQUIREMENTS THROUGH NORTH WALL.
10. DOOR HARDWARE GROUP 1:
    - 1½ PR HINGES – H1
    - 1 EXIT DEVICE – X1
    - 1 CLOSER – C6
    - 1 THRESHOLD – T1
    - 1 SET WEATHERSTRIP – W1
    - 1 DOOR SWEEP
    - 2 KICKPLATES (EACH SIDE)

    HARDWARE FOR DOORS D102 AND D103 SEE SPECIFICATION 08380.
11. MIXING UNIT TO BE ANCHORED TO CONCRETE BY MANUFACTURER. PROVIDE ANCHOR BOLT LAYOUT AND STAMPED SHOP DRAWINGS PRIOR TO CONSTRUCTION.
12. FRAMED FABRIC ROOF STRUCTURE MANUFACTURER TO PROVIDE FRAMING SUPPORT FOR FIRE EXTINGUISHERS AT LOCATIONS SHOWN. TOP OF FIRE EXTINGUISHER TO BE 1400mm ABOVE FINISHED FLOOR LEVEL.

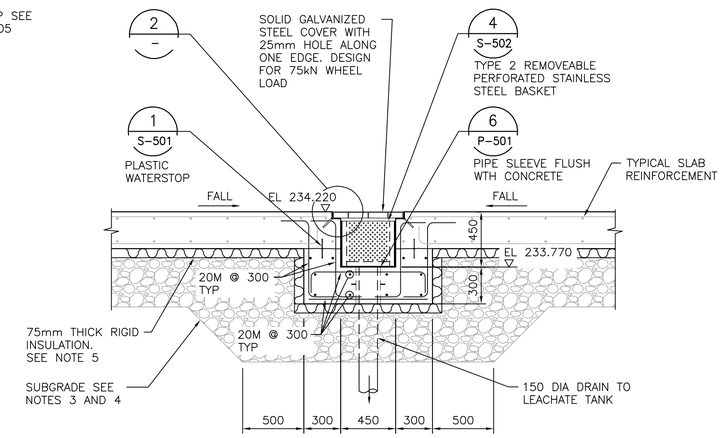

1 - SUMP DETAIL
1:25

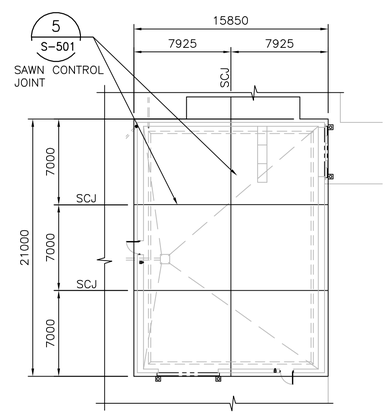

3 - JOINTS – LAYOUT PLAN
1:500

SCJ – DENOTES SAWN CONTROL JOINT

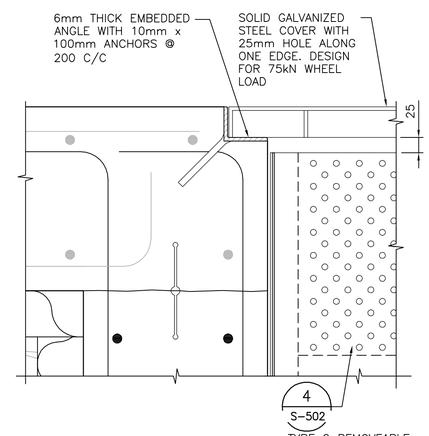

2 - DETAIL
1:10

APEGM
Certificate of Authorization
CH2M HILL Canada Ltd.
No. 1441 Date: January 25, 2013

B.M.
ELEV.
CONSTRUCTION COMPLETION DATE: YYYY MM DD

NO.	REVISIONS	DATE	BY
0	ISSUED FOR CONSTRUCTION	13/01/25	JK

CH2MHILL®

DESIGNED BY	KS	CHECKED BY	RP
DRAWN BY	JK	APPROVED BY	BM
SCALE: HORIZONTAL	AS SHOWN	RELEASED FOR CONSTRUCTION	
VERTICAL	AS SHOWN		
DATE	2013 01 25	DATE	

PLOT DATE: 2013 01 21

ENGINEER'S SEAL
PROVINCE OF MANITOBA
R.P. PARIKH
Member
30474
REGISTERED PROFESSIONAL ENGINEER

CONSULTANT DRAWING NUMBER
S-211

BID OPPORTUNITY: 839-2012

Winnipeg
THE CITY OF WINNIPEG
WATER AND WASTE DEPARTMENT
ENGINEERING DIVISION

BRADY ROAD RESOURCE MANAGEMENT FACILITY
LEAF AND YARD WASTE AND
PILOT BIOSOLIDS COMPOSTING
STRUCTURAL
M&R BUILDING GENERAL ARRANGEMENT

SHEET 19 OF 45
CITY DRAWING NUMBER
1-0400B-S0004-001-00

FILE PATH: C:\pw_workdir\ch2mhill_wbg\jcortez1\d0198708\
FILE NAME: S-211_438634.dwg