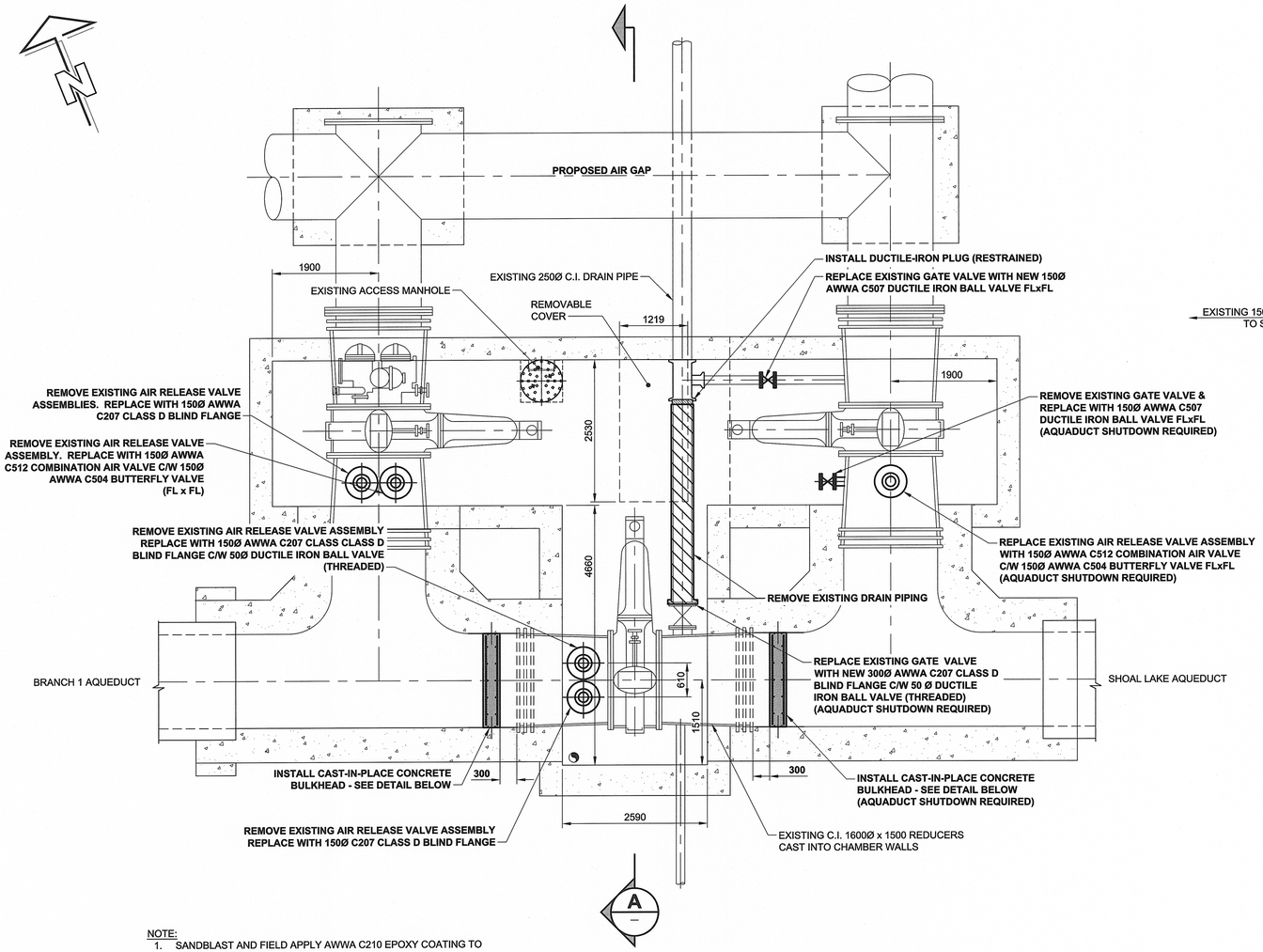

NOTE:

1. SANDBLAST AND FIELD APPLY AWWA C210 EPOXY COATING TO ALL EXPOSED CAST IRON/STEEL FITTINGS, VALVES AND STEEL BRACES WITHIN CHAMBER

PLAN

0 0.5 1 1.5 m SCALE 1:50

CHAMBER HV-Y410C

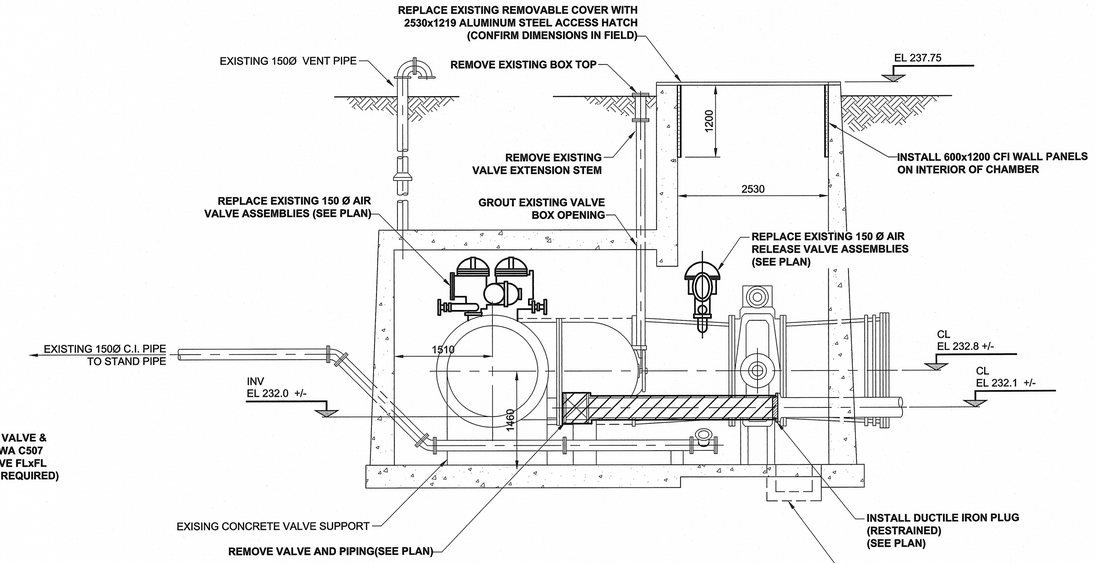

SECTION A

0 0.5 1 1.5 m SCALE 1:50

CHAMBER HV-Y410C

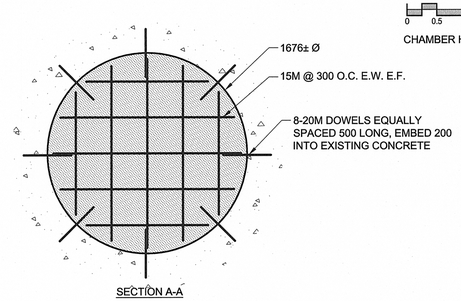

SECTION A-A

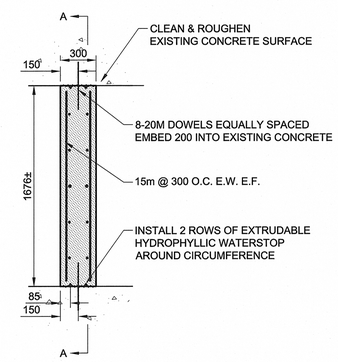

DETAIL 1

0 0.25 0.5 0.75 m SCALE 1:25

PROPOSED CONCRETE BULK HEAD

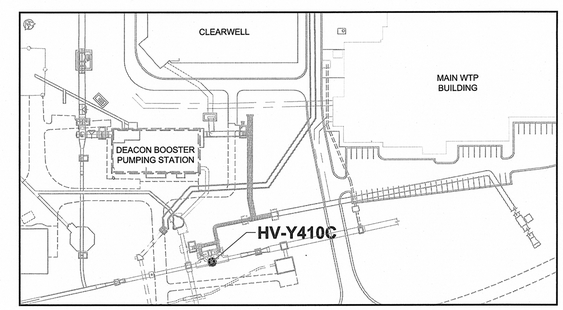

KEY PLAN

SCALE: NTS

METRIC
WHOLE NUMBERS INDICATE MILLIMETRES
DECIMALIZED NUMBERS INDICATE METRES

BID OPPORTUNITY NO. 708-2012

APEGM
Certificate of Authorization
AECOM Canada Ltd.
No. 4671 Date: 21 Sept. 2012

LOCATION APPROVED
UNDERGROUND STRUCTURES
SUPR. U/G STRUCTURES COMMITTEE DATE

NOTE:
LOCATION OF UNDERGROUND STRUCTURES AS SHOWN ARE BASED ON THE BEST INFORMATION AVAILABLE. BUT NO GUARANTEE IS GIVEN THAT ALL EXISTING UTILITIES ARE SHOWN OR THAT THE GIVEN LOCATIONS ARE EXACT. CONFIRMATION OF EXISTENCE AND EXACT LOCATION OF ALL SERVICES MUST BE OBTAINED FROM THE INDIVIDUAL UTILITIES BEFORE PROCEEDING WITH CONSTRUCTION.

NO.	REVISIONS	YY/MM/DD	BY
0	ISSUED FOR CONSTRUCTION	12/09/21	KMB/KLC

AECOM

DESIGNED BY	ADB	CHECKED BY	
DRAWN BY	KMB	APPROVED BY	
HOR. SCALE	AS NOTED	RELEASED FOR CONSTRUCTION	
VERT. SCALE	N/A		
DATE		DATE	Sept. 21, 2012

PROFESSIONAL'S SEAL
PROVINCE OF MANITOBA
21 SEPT. 2012
C.C. MACEY
REGISTERED ENGINEER

CONSULTANT DRAWING NO.
60163046-01-C-104-R0X.dwg

Winnipeg
THE CITY OF WINNIPEG
WATER AND WASTE DEPARTMENT

WATER TREATMENT PLANT
PROTECTED CONNECTIONS

CIVIL
VALVE CHAMBER HV-Y410C
PLAN, ELEVATIONS & SECTIONS

SHEET 5 OF 10

CITY DRAWING NUMBER
1-0601Y-C0057-001

REV 0

D SIZE 22" x 34" (559mm x 864mm)

PLOT: 12/09/21 10:26:45 AM

AECOM REVIEW | DRFT CHK

AECOM FILE NAME: 60163046-01-C-104-R0X.dwg Saved By: cooperki