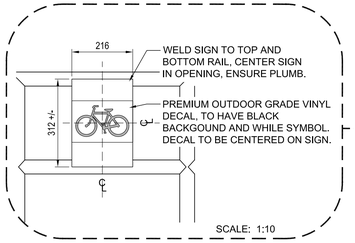

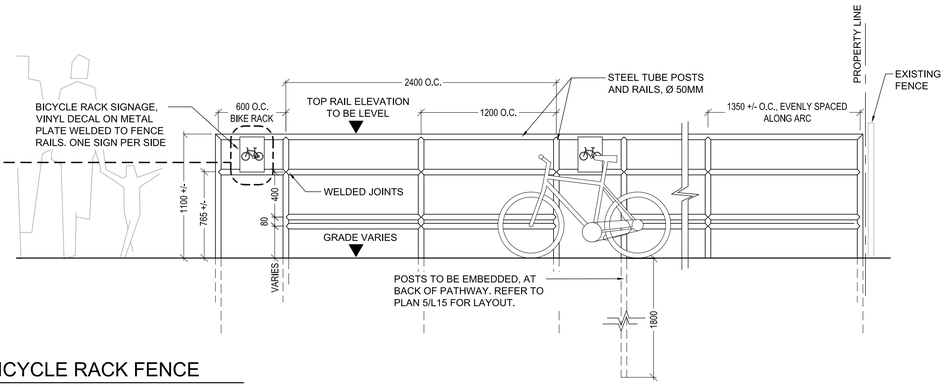

1 L20 BICYCLE RACK FENCE
SCALE - 1 : 25

RAILING AND FENCE NOTE:

1. ALL STEEL TO BE GALVANIZED AND PAINTED BLACK WITH 2 PARK EPOXY PAINT. TO BE TOUCHED UP ON SITE AS NEEDED TO PROTECT AGAINST CORROSION.

2. REFER TO L15 FOR LAYOUT

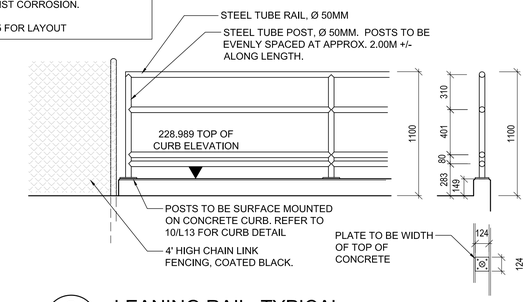

2 L20 LEANING RAIL, TYPICAL
SCALE - 1 : 25

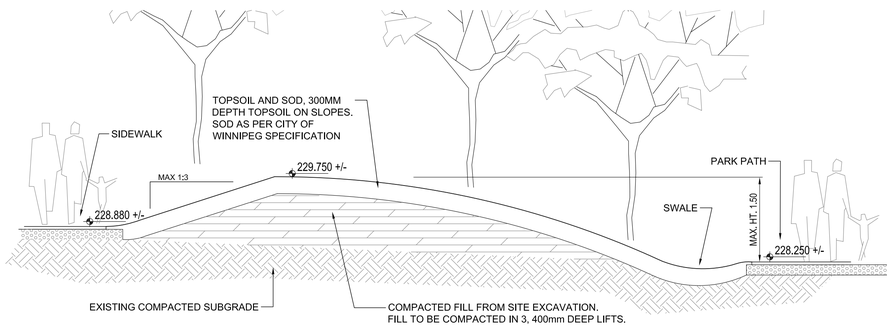

3 L20 BERM SECTION - ENTRY
SCALE - 1 : 50

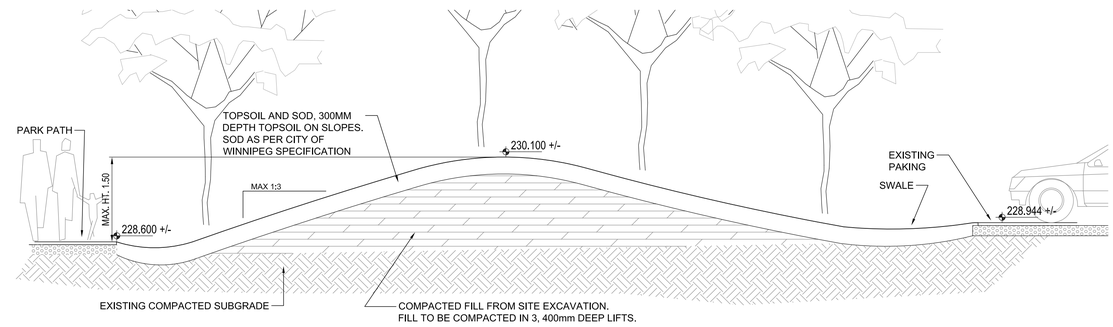

4 L20 BERM SECTION - NORTH EAST
SCALE - 1 : 50

BENCH NOTES:

1. ALL METAL TO BE GALVANIZED AND PAINTED BLACK

2. ALL TIMBER TO BE CEDAR

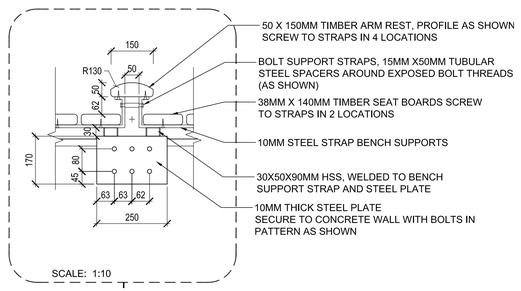

ALL CUSTOM BENCH DETAILS PENDING SHOP DRAWINGS

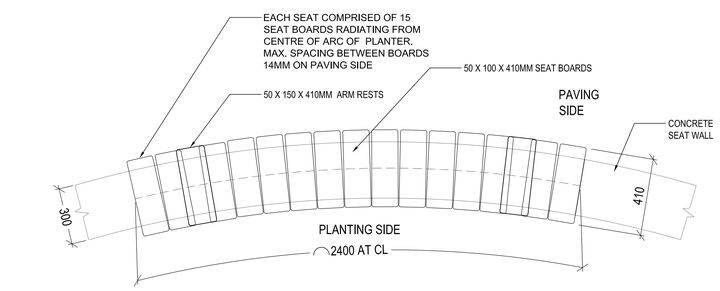

7 L20 WEDGE BENCH - TYP LAYOUT
SCALE - 1 : 10

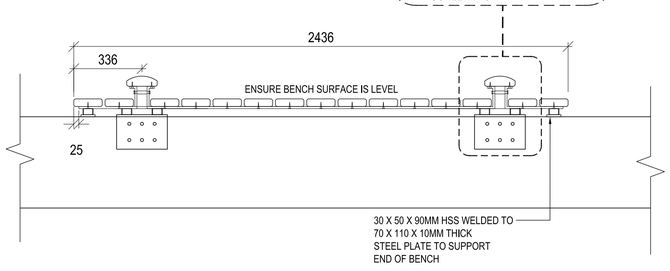

5 L20 WEDGE BENCH - FRONT ELEVATION
SCALE - 1 : 20

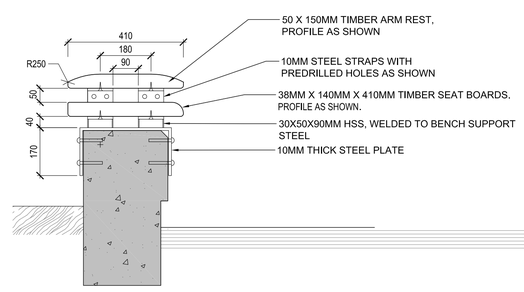

6 L20 WEDGE BENCH - SECTION
SCALE - 1 : 20

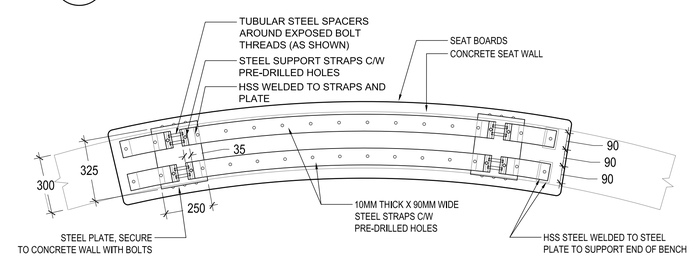

8 L20 WEDGE BENCH - TYP STRUCTURE PLAN
SCALE - 1 : 10

NOTES:

REV	YY / MM / DD	DESCRIPTION	BY
1	12 / 08 / 16	ISSUED FOR TENDER	DKM
0	12 / 07 / 19	ISSUED FOR TENDER	DKM

A. SECTION LETTER OR DETAIL NUMBER,
B. DRAWING WHERE SECTION OR DETAIL IS DRAWN.

OR

A. DRAWING WHERE SECTION OR DETAIL IS INDICATED,
— SECTION OR DETAIL SHOWN ON SAME DRAWING.

A/B A/—

SEAL: the manitoba association of landscape architects — DERCK K. MURRAY, member no. 63

CLIENT: Winnipeg — CITY OF WINNIPEG, PLANNING, PROPERTY AND DEVELOPMENT DEPARTMENT, 300 – 65 GARRY ST. R3C 4K4

SCATLIFF +MILLER +MURRAY Inc.
TEL 204 927-3444 FAX 204 927-3443
1120 - 201 PORTAGE AVENUE WINNIPEG, MB, CANADA

PROJECT: KELVIN RECREATION SITE B.P.C.C.
TITLE: LANDSCAPE DETAILS

DESIGN	DRAWN	DATE - Y / M / D	SCALE
DKM/AH	AH/IT	12/07/19	AS NOTED
CHECKED	APPROVED	PROJECT NO.	DRAWING NO.
DKM	DKM	11-0107-22	L-20

CAD File Name: 11-0107-22_kelvin_tender_118-19-20-details.dwg
sheet size - Super A1 24" x 36"
plotscale - 1:1 (metric)