A1 SIZE - 594mm x 841mm

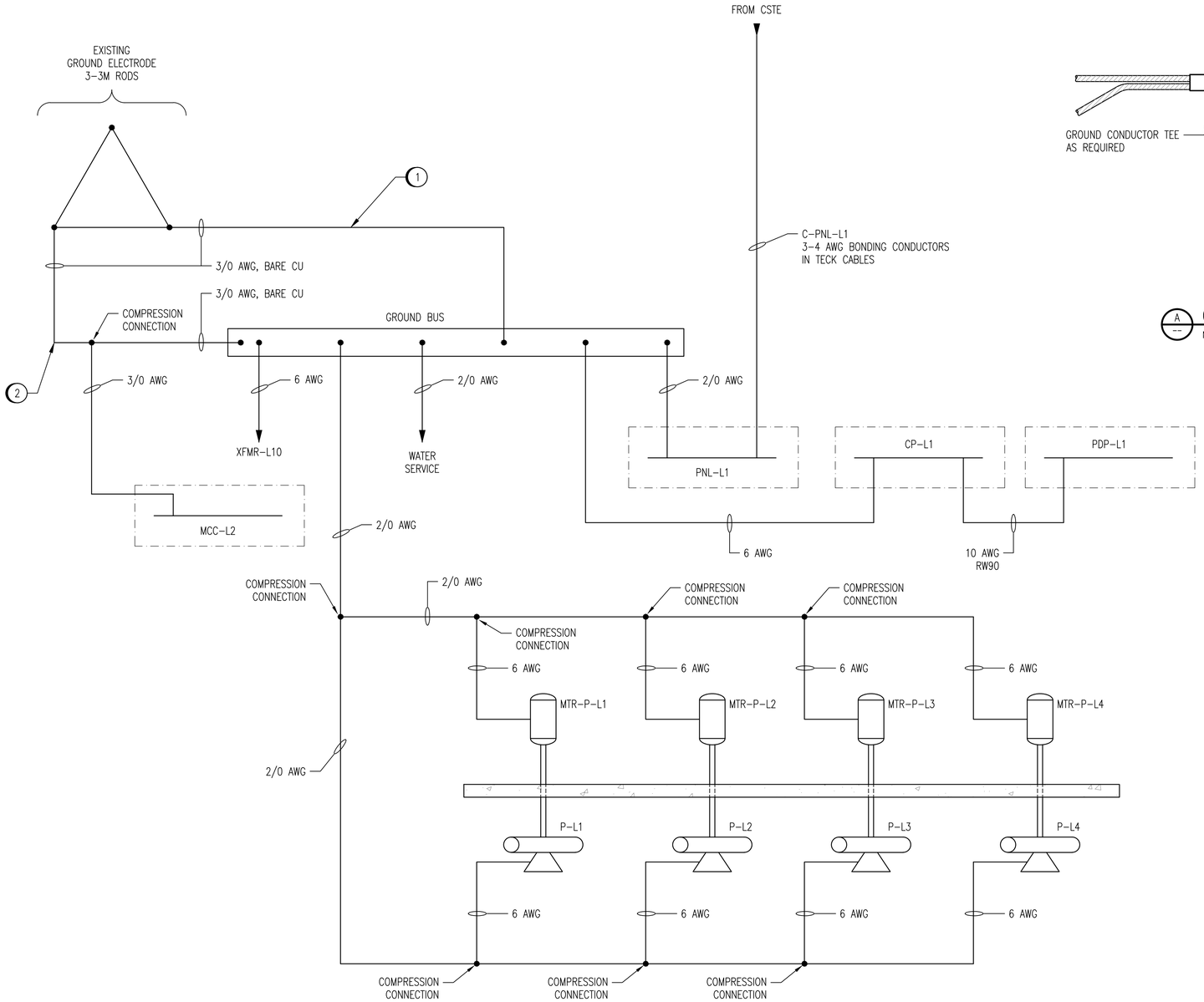

DETAIL: GROUNDING RISER DIAGRAM

SCALE: NTS

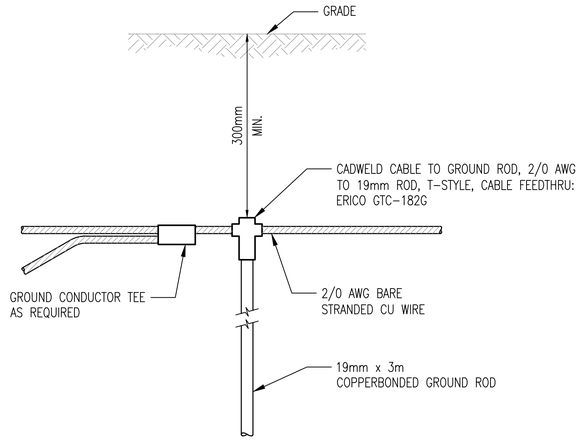

A GROUND ROD ASSEMBLY

NTS

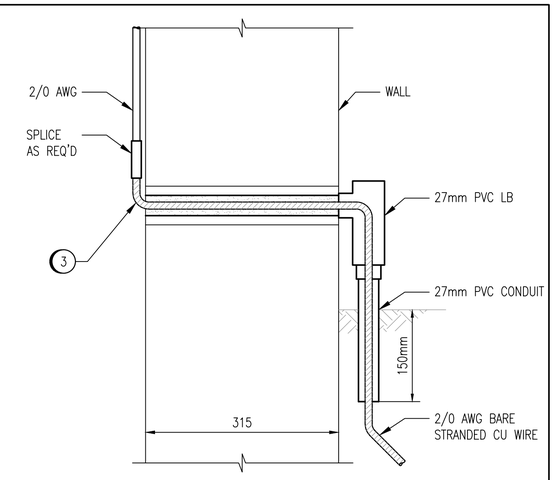

B BUILDING ENTRY ABOVE GRADE

NTS

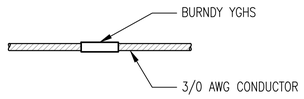

C GROUND CONDUCTOR SPLICE

NTS

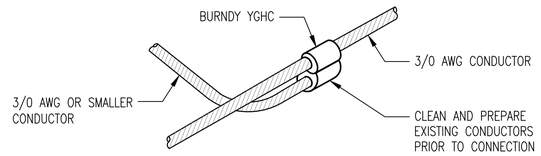

D GROUND CONDUCTOR TEE

NTS

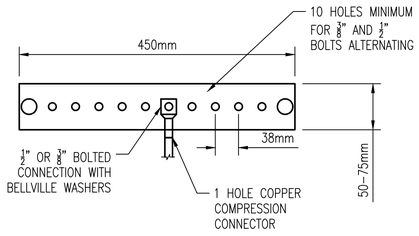

E GROUND BUS DETAIL

NTS

CONSTRUCTION NOTES:

1. PROVIDE NEW GROUND CONNECTION FROM GROUND ELECTRODE, NOT CONNECTED TO MCC-L2, TO GROUND BUS.
2. CLEAN THE EXISTING GROUND CONDUCTOR CONNECTED TO MCC-L2 AND CONNECT A NEW 3/0 AWG CONDUCTOR TO THE GROUND BUS.
3. CORE DRILL THROUGH WALL, INSTALL CABLE AND SEAL PENETRATION.

APEGM Certificate of Authorization

SNC-Lavalin Inc.

No. 4489

NO.	REVISIONS	DATE	DESIGN	CHECK
00	ISSUED FOR TENDER, BID OPP. 907-2011	2012/02/09	VE	CJR

SNC·LAVALIN

SNC-LAVALIN INC.
148 Nature Park Way
Winnipeg, MB, Canada R3P 0X7
204-786-8080

DESIGNED BY: V. ELIMBAN	CHECKED BY: C. REIMER
DRAWN BY: MJ. PERSSON	APPROVED BY: C. REIMER
SCALE: NTS	RELEASED FOR CONSTRUCTION BY: K. R. ZUREK
DATE: 2011/09/22	DATE: 2012/02/23
CONSULTANT NO.: 508042-0000-47DD-0031	

ENGINEER'S SEAL

ORIGINAL DRAWING
SEALED BY:
C. J. REIMER
SNC-LAVALIN
MEMBER #21968
2012/02/23
REV. 00

Winnipeg

THE CITY OF WINNIPEG
WATER AND WASTE DEPARTMENT

MONTCALM WASTEWATER PUMPING STATION
2011 UPGRADES
GROUNDING INSTALLATION DETAILS

CITY DRAWING NUMBER	SHEET	REV.	SIZE
1-0164L-E0031	001	00	A1

1-0164L-E0031-001-00.dwg

LAST SAVE: 2012/02/23 - 3:02pm
PATH: M:\508042\4ENG\47ELE\DD - General DWG\1-0164L-E0031-001-00.dwg