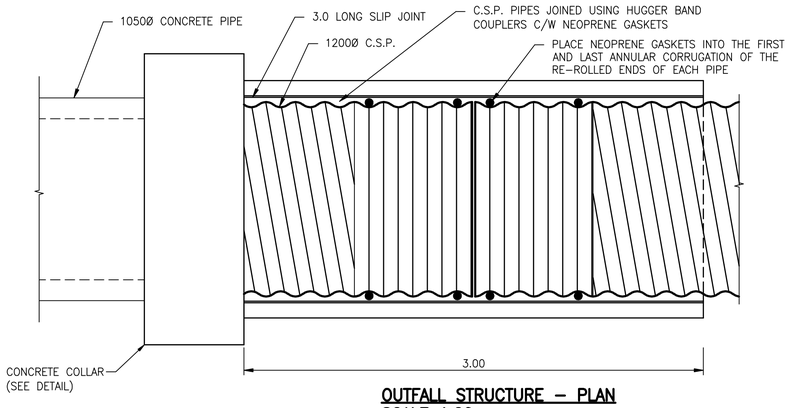

OUTFALL STRUCTURE – PLAN
SCALE 1:20

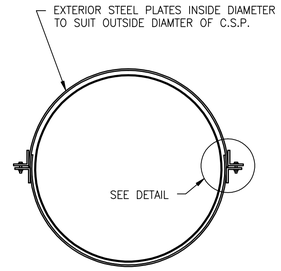

EXTERNAL SLIP JOINT – SECTION
SCALE 1:20

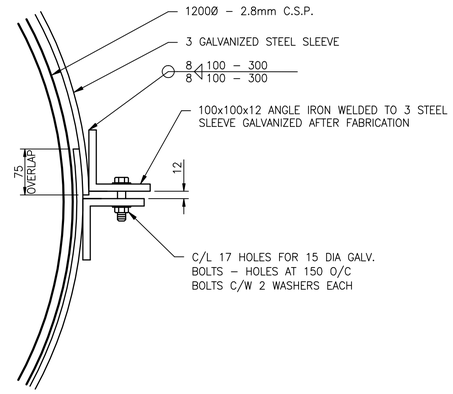

EXTERNAL SLIP JOINT – DETAIL
SCALE 1:5

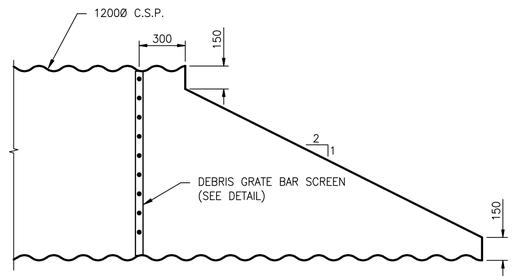

BEVELLED END – SECTION
SCALE 1:20

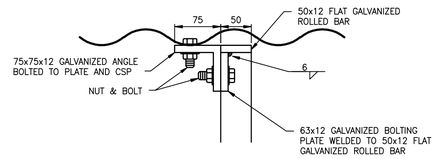

SAFETY GRATE BAR SCREEN – DETAIL
SCALE 1:5

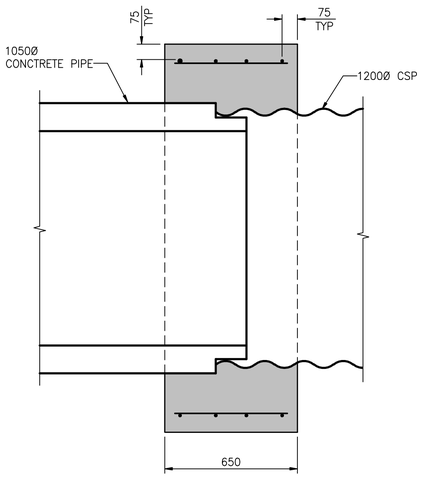

ELEVATION

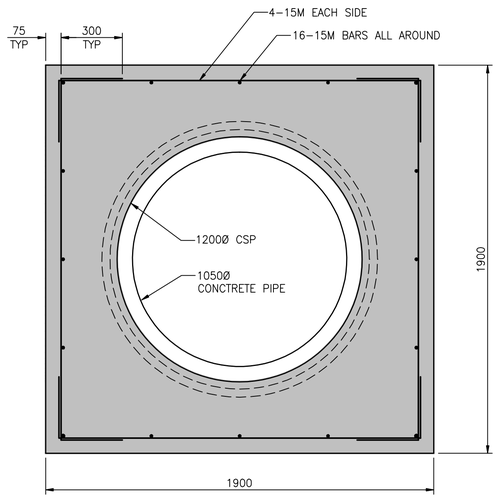

SECTION

CONCRETE COLLAR
SCALE 1:15

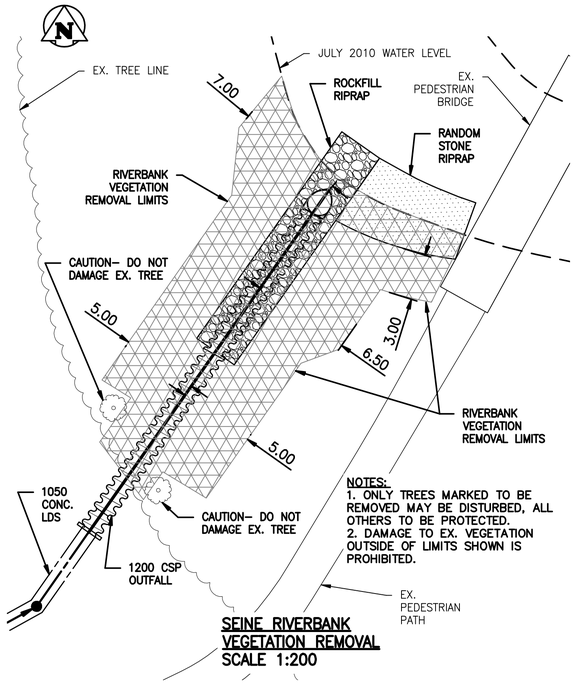

NOTES:
1. ONLY TREES MARKED TO BE REMOVED MAY BE DISTURBED, ALL OTHERS TO BE PROTECTED.
2. DAMAGE TO EX. VEGETATION OUTSIDE OF LIMITS SHOWN IS PROHIBITED.

SEINE RIVERBANK VEGETATION REMOVAL
SCALE 1:200

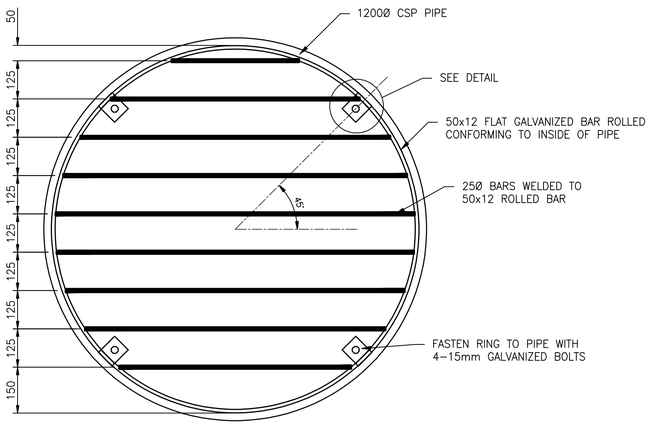

SAFETY GRATE BAR SCREEN
SCALE 1:10

BID OPPORTUNITY NO. 886–2010

APEGM
Certificate of Authorization
Stantec Consulting Ltd.
No. 1301 Date:_____

LOCATION APPROVED
UNDERGROUND STRUCTURES

SUPV. U/G STRUCTURES COMMITTEE — DATE

NOTE:
LOCATION OF UNDERGROUND STRUCTURES AS SHOWN ARE BASED ON THE BEST INFORMATION AVAILABLE BUT NO GUARANTEE IS GIVEN THAT ALL EXISTING UTILITIES ARE SHOWN OR THAT THE GIVEN LOCATIONS ARE EXACT. CONFIRMATION OF EXISTENCE AND EXACT LOCATION OF ALL SERVICES MUST BE OBTAINED FROM THE INDIVIDUAL UTILITIES BEFORE PROCEEDING WITH CONSTRUCTION.

B.M. X
ELEV. X m

NO.	REVISIONS	DATE	BY
1	REVISED AS PER ADDENDUM NO. 1	10.12.17	J.K.H.

Stantec Consulting Ltd.
905 Waverley Street, Winnipeg, Manitoba
Tel 204–489–5900 Fax 204–453–9012

DESIGNED BY	J.C	CHECKED BY	H.K.
DRAWN BY	D.M.L.	APPROVED BY	L.C.
HOR. SCALE: VERTICAL:		RELEASED FOR CONSTRUCTION:	
DATE	2010.07.26	DATE	

ENGINEER'S SEAL
PROVINCE OF MANITOBA
H.A. KATZ
REGISTERED PROFESSIONAL ENGINEER

CONSULTANT DRAWING NO.
C-244

Winnipeg
THE CITY OF WINNIPEG
WATER AND WASTE DEPARTMENT
ENGINEERING DIVISION

DETAILS
2 OF 2

MAGER COMBINED SEWER DISTRICT SEWER SEPARATION
CONTRACT NO. 3

SHEET 12 OF 12
CAD FILE DRAWING NUMBER 11890c-243-712.dwg
CITY DRAWING NUMBER LD-5580

METRIC
WHOLE NUMBERS INDICATE MILLIMETRES
DECIMALIZED NUMBERS INDICATE METRES

80/712B

H:\1112\active\111211880\Winnipeg\402_design\phase_3\sheet_files\11890c-243-712.dwg
2010-12-17 12:18PM By: jhines